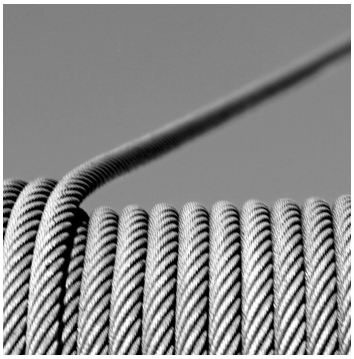

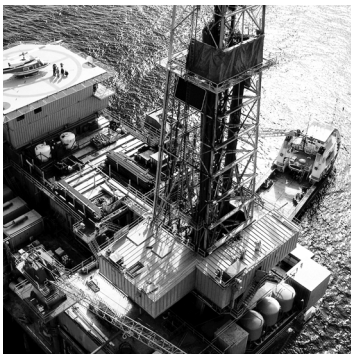

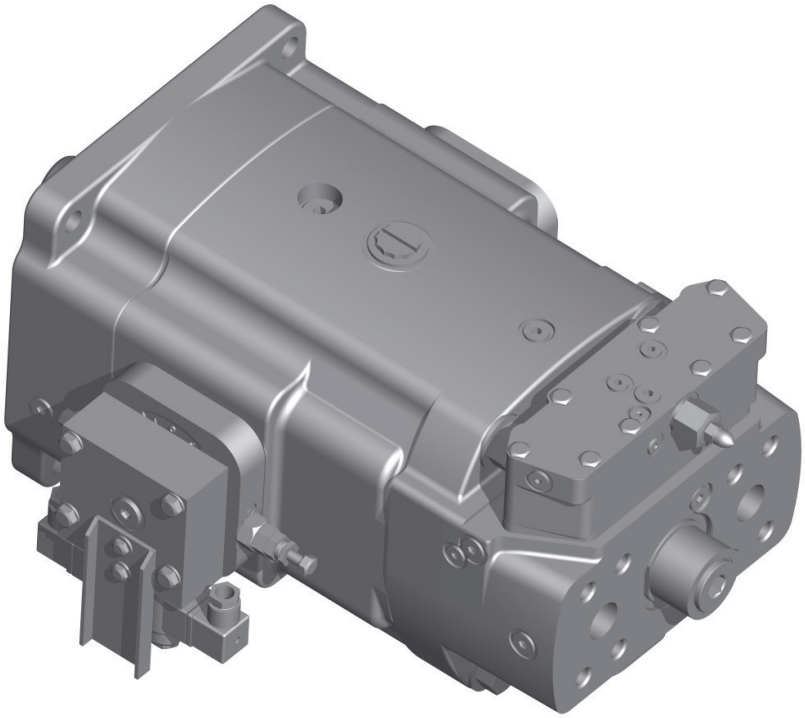

GOLD CUP®
P/M11-14 Variable Displacement

Spare Parts and Exploded Views

HY28-2677-03/GC/US Effective: June 2023

Parker

ENGINEERING YOUR SUCCESS.

Hydraulic Pump Division and Denison Hydraulics

The Hydraulic Pump Division of Parker Hannifin was formed in 2004 when our significant piston pump business was expanded through the acquisition of **Denison Hydraulics**. The addition of Denison allowed us to marry the wealth of knowledge that both companies have in the design, manufacture, and application of piston products in both open circuit and closed circuit system applications. Since before WWII, Denison products have been chosen for Military test stand applications and for shipboard hydraulic applications being recognized as technology leaders.

The heavy duty **GOLD CUP®** series of pumps and motors in this catalog represent a broadening of our product offering with hydrostatic transmission applications in marine, drilling, and shredding applications, among others. The tried and true design of the **GOLD CUP®** product line incorporates features such as integral servo and replenishing pump, hot oil shuttle, and a unique servo control system; all of which combine to provide a rugged self contained package which can withstand the harshest of conditions and continue to perform with trouble free long life.

The division is a leading worldwide manufacturer of hydraulic components and systems for earthmoving and construction vehicles; for mining equipment; for pulp and paper, chemical and other processing equipment; for ships and ordnance equipment; and for such in-plant machines as machine tools, plastic molding, die casters, and stamping presses.

Parker

DENISON | Hydraulics

The product information, specifications, and descriptions contained in this publication have been compiled for the use and convenience of our customers from information furnished by the manufacturer; and we can not, and do not, accept any responsibility for the accuracy or correctness of any description, calculation, specification, or information contained herein. No such description, calculation, specification, or information regarding the products being sold has been made part of the basis of the bargain, nor has same created or amounted to an express warranty that the products would conform thereto. We are selling the goods and merchandise illustrated and described on this publication on an “as is” basis, and disclaim any implied warranty, including any warranty of merchantability or warranty of fitness for any particular purpose whatsoever, with respect to the goods and merchandise sold. All manufacturer warranties shall be passed on to our customers, but we shall not be responsible for special, indirect, incidental, or consequential damages resulting from the use of any of the products or information contained or described on this publication. Further, we reserve the right to revise or otherwise make product improvements at any time without notification.

⚠ WARNING - USER RESPONSIBILITY

FAILURE OR IMPROPER SELECTION OR IMPROPER USE OF THE PRODUCTS DESCRIBED HEREIN OR RELATED ITEMS CAN CAUSE DEATH, PERSONAL INJURY AND PROPERTY DAMAGE.

This document and other information from Parker-Hannifin Corporation, its subsidiaries and authorized distributors provide product or system options for further investigation by users having technical expertise.

The user, through its own analysis and testing, is solely responsible for making the final selection of the system and components and assuring that all performance, endurance, maintenance, safety and warning requirements of the application are met. The user must analyze all aspects of the application, follow applicable industry standards, and follow the information concerning the product in the current product catalog and in any other materials provided from Parker or its subsidiaries or authorized distributors.

To the extent that Parker or its subsidiaries or authorized distributors provide component or system options based upon data or specifications provided by the user, the user is responsible for determining that such data and specifications are suitable and sufficient for all applications and reasonably foreseeable uses of the components or systems.

OFFER OF SALE

The items described in this document are hereby offered for sale by Parker-Hannifin Corporation, its subsidiaries or its authorized distributor. This offer and its acceptance are governed by the provisions stated in the detailed "Offer of Sale" elsewhere in this document.

Pump Ordering Code 2
P/M11-14 Sectional Views 5
Section View - A - Input Shaft & Retainer Assembly 7
Section View - A - Kits 10
P/M11-14 Shaft Sleeve Installation Tool Details 14
Section View - B - Housing, Mtg. Flange & Stem Assembly 15
Section View - C - Cam & Cradle Assembly 18
Section View - D - Rotating Group Assembly 21
Section View - E - Pump Type - P - Port Block Assembly 24
Section View - E - Pump Type - V - Port Block Assembly 27
Section View - E - Pump Type – S & X - Port Block Assembly 30
Section View - E - Pump Type – R & L - Port Block Assembly 34
Section View - E - Motor Type – H & V - Port Block Assembly 40
Section View - E - Motor Type – R & L - Port Block Assembly 43
Section View - F - Valve Block Assembly 49
Section View - G - Valve Block Assembly for 700 Control 52
Section View - H - Motor Shuttle & Reverse Compensator Assembly 55
Offer of Sale 58

Notes:

1. Parts list and associated drawings shown in this bulletin are for standard variable volume model pump and motors only. All documentation for special “M2” modification model numbers must be verified with HPD Factory Representative prior to ordering parts for such products.
2. * Indicates Special instructions or Considerations.
3. ** Indicates Common Parts.
4. N/A Indicates Not Available or Not Applicable.
5. All documentation represented in this bulletin is for standard production models only, (as follows):
   5.1. P11 = Design Level “C” Model Pump
   5.2. P14 = Design Level “C” Model Pump
   5.3. M11 = Design Level “A” Model Motor
   5.4. M14 = Design Level “A” Model Motor
6. See ordering code for configuration options.
7. All orientation references are described when viewing unit from main drive shaft.
8. Assembly part numbers with -0 suffixes, indicate Buna N (Nitrile) seal compound. For Ethylene Propylene, (EPR), compound, use -4 suffix. For Fluorocarbon compound, use -5 suffixes.
9. Detail part numbers for O-rings with 671/691 prefix, indicates Buna N (Nitrile) seal compound. For Ethylene Propylene, (EPR), compound, use -4 suffix. For Fluorocarbon compound, use -5 suffixes.
10. Drawings with items marked with double balloons indicate assemblies.

Parker Hannifin Corporation
Hydraulic Pump and Power Systems Division
United States

P								
Pump/Motor	Displacement	Type	Efficiency	Shaft	Rotation	Seals	Design	Primary Control

Code	Pump/Motor
P	Pump
M	Motor

Code	Displacement
11	11.0 in³/rev (180 cc/rev)
14	14.0 in³/rev (229 cc/rev)

Code	Type
P	Variable displacement, closed circuit (Pumps only)
X	Variable displacement with medium torque thru-drive, closed circuit (Pumps only)
S	Variable displacement with medium torque thru-drive & shuttle package, closed circuit (Pumps only)
R	Variable displacement with high torque thru-drive
L	Variable displacement with high torque thru-drive & shuttle package
V	Variable displacement, open circuit (Pumps only) Variable displacement (Motors only)
H	Variable displacement with medium torque thru-drive & shuttle package, closed circuit (Motors only)

Code	Efficiency
Omit	Standard Efficiency
E	Extreme Duty Barrel Bearing/Standard Efficiency

Code	Shaft
1	Splined SAE - floating shaft w/mechanical seal
2	Keyed SAE - mechanical shaft seal
3	Splined SAE - mechanical shaft seal
7	Keyed SAE - double lip shaft seal
8	Splined SAE - double lip shaft seal
9	Keyed (long) SAE - double lip shaft seal
10	Keyed (long) SAE - mechanical shaft seal

[1] Not ATEX approved

Code	Rotation
R	Clockwise (Pumps only)
L	Counterclockwise (Pumps only)
N	Bidirectional (Motors only)

Code	Seals
1	Nitrile (Buna N)
4	EPR (not available with “5A” or “5C” primary controls or “E” secondary control) (unpainted pump unless otherwise specified)
5	Flourocarbon (Viton)

Design letter (assigned by manufacturer)

Code	Primary Control
10	Screw adjustment (spring offset to maximum displacement) (Pumps only)
2A	Cylinder control w/ adjustable maximum volume stops
2H	Cylinder control - 3 position (spring centered with zero adjustment) (Pumps only)
2M	Cylinder control - 2 position electro-hydraulic w/ adjustable maximum volume stop (spring offset to minimum displacement)
2N	Cylinder control - 3 position (spring centered) electro-hydraulic (Pumps only)
40	Rotary servo - spring centered (Pumps only)
4A	Rotary servo - spring centered w/ adjustable maximum volume stops (Pumps only)
4B	Rotary servo - spring centered w/ automatic brake control (Pumps only)
4C	Rotary servo - spring centered w/ adjustable maximum volume stops & automatic brake control (Pumps only)
5A	Electro-hydraulic stroker w/ adjustable maximum volume stops
5C	Electro-hydraulic stroker w/ adjustable maximum volume stops & automatic brake control (Pumps only)
7D	High IQ with 10 gpm servovalve & volume indicator (Pumps only)
7F	High IQ with 10 gpm servovalve & 4A (rotary servo) control (Pumps only)
7J	High IQ with DF+ valve & volume indicator (Pumps only)
7K	High IQ with DF+ valve & 4A (rotary servo) control (Pumps only)
7Q	High IQ with digital DF+ valve & volume indicator (Only with “8” secondary control) (Pumps only)
7R	High IQ with digital DF+ valve & 4A (rotary servo) control (Only with “8” secondary control) (Pumps only)
8A	Hydraulic stroker w/ adjustable maximum volume stops
8C	Hydraulic stroker w/ adjustable maximum volume stops & automatic brake control (Pumps only)
9A	Electro-hydraulic stroker w/ adjustable maximum volume stops 1
9C	Electro-hydraulic stroker w/ adjustable maximum volume stops & automatic brake control 1 (Pumps only)
9D	Electro-hydraulic stroker w/ adjustable maximum volume stops (Pumps only)

Parker Hannifin Corporation
Hydraulic Pump and Power Systems Division
United States

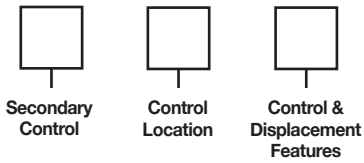

Code	Secondary Control
0	Volume indicator (Motors only)
2	Volume indicator (Pumps only)
3	Reverse Compensator (Spring Offset Max. + Volume Indicator (Motors only)
4	Torque limiter & volume indicator (Pumps only)
5	Reverse Compensator (Spring Offset Min. + Volume Indicator (Motors only)
6	Cam position feedback potentiometer
7	Cam position feedback RVDT (AC)
8	Cam position feedback RVDT (DC)
9	Hall Effect Cam position feedback
E	Intelligence Enable w/ sensors (only P,X,S,R,L,V Type and with only 9A Primary Control) (Pumps only)
U	Reverse compensator (3) + cam position feedback potentiometer (6) (Motors only)
V	Reverse compensator (3) + cam position feedback RVDT (7) (Motors only)
W	Reverse compensator (3) + cam position feedback RVDT (8) (Motors only)
X	Reverse compensator (5) + cam position feedback potentiometer (6) (Motors only)
Y	Reverse compensator (5) + cam position feedback RVDT (7) (Motors only)
Z	Reverse compensator (5) + cam position feedback RVDT (8) (Motors only)

Code	Control Location
A	Primary control on port A side
B	Primary control on port B side

Control	Pump Codes	Motors Codes	Control & Displacement Features
2M*	00	0	4D01 valve, 110VAC/60Hz with Hirschmann connector
	01	1	4D01 valve, 12VDC with Hirschmann connector
	02	2	4D01 valve, 240VAC/50Hz with Hirschmann connector
	03	3	4D01 valve, 110VAC/60Hz, wiring box
	04	4	4D01 valve, 12VDC, wiring box
	05	5	Cetop3 (D03)(NG6) interface, no directional valve
	06	6	4D01 valve, 24VDC with Hirschmann connector
	07	7	4D01 valve, 110VAC/50Hz with Hirschmann connector
2N*	00	-	4D01 valve, 110VAC/60Hz with Hirschmann connector (Pumps only)
	01	-	4D01 valve, 12VDC with Hirschmann connector (Pumps only)
	02	-	4D01 valve, 240VAC/50Hz with Hirschmann connector (Pumps only)
	03	-	4D01 valve, 110VAC/60Hz, wiring box (Pumps only)
	04	-	4D01 valve, 12VDC, wiring box (Pumps only)
	05	-	Cetop3 (D03)(NG6) interface, no directional valve (Pumps only)
	06	-	4D01 valve, 24VDC with Hirschmann connector (Pumps only)
	07	-	4D01 valve, 110VAC/50Hz with Hirschmann connector (Pumps only)
5**	00	0	with deadband
	01	1	without deadband
7**	00	-	without manual override shutoff (Pumps only)
	01	-	with manual override shutoff (required for F, G, L, K & R primary options) (Pumps only)
8**	00	0	75 - 350 psi (5 - 24 bar)
	01	1	75 - 435 psi (5 - 30 bar)
	02	-	100 - 380 psi (7 - 26 bar) (Pumps only)
	03	-	150 - 400 psi (10 - 28 bar) (Pumps only)
	04	-	75 - 250 psi (5 - 17 bar) (Pumps only)
9**	00	0	24VDC
	01	1	12VDC
All Other	00	0	None

Parker Hannifin Corporation
Hydraulic Pump and Power Systems Division
United States

Code	Shuttle Features (Motors only)
Omit	(Pumps only)
0	Without Orifices
1	With Orifices

Code	Internal Pump
Omit	All Motors
0	2.14 in^3/rev. (35 cc/rev.) (P/S/X only)
X	No Internal Pump (Standard on R/L and Pumps)

Code	External Drive
Omit	None
M	Steel Blanking Plate Less Coupling (S/X/R/L only)
A	SAE-A (SAE 82-2) (S/X/R/L/M only)
B	SAE-B (SAE 101-2) (S/X/R/L/M only) SAE-B (SAE 101-4) (R/L/M only)
C	SAE-B (SAE 127-2) (R/L/M only) SAE-B (SAE 127-4) (R/L/M only)

Code	External Mounting
Omit	No external mount
0	No external pump mounted
1	External pump mounted (requires special modification “-M2”) (must be separately specified)
2	Hazardous Rated pump mounted (requires special modification “-EX”) (must be separately specified)

Code	Special Modifications
Omit	None (Unit Painted Black)
NP	No Paint
EX	ATEX APPROVED PUMPS without “E” secondary control (EX: Bronze Caged Barrel Bearing Pumps, etc.)
M2	Other special modification (example: bronze caged barrel bearing for low viscosity fluids, tandem pumps, etc.)

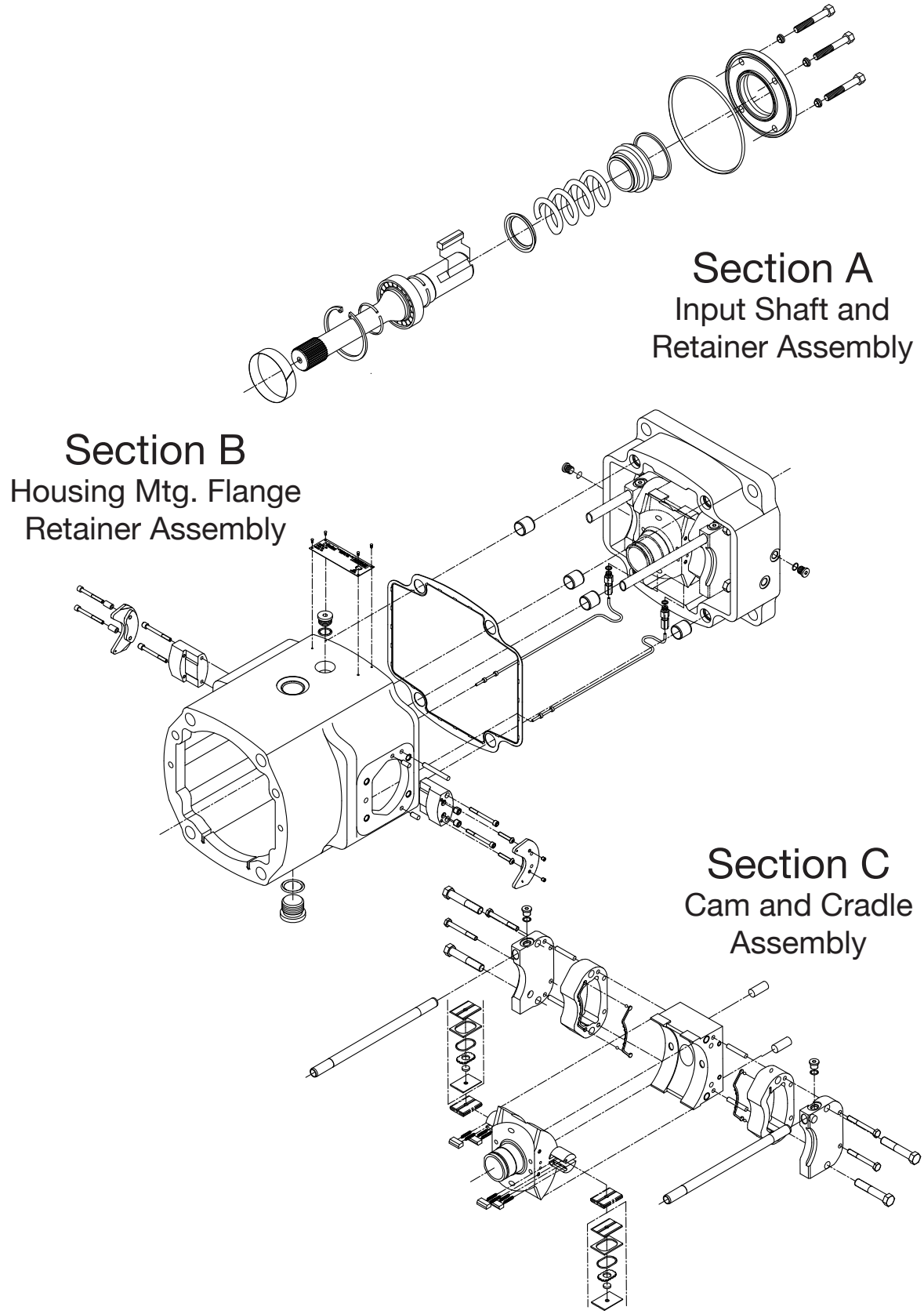

Parker Hannifin Corporation
Hydraulic Pump and Power Systems Division
United States

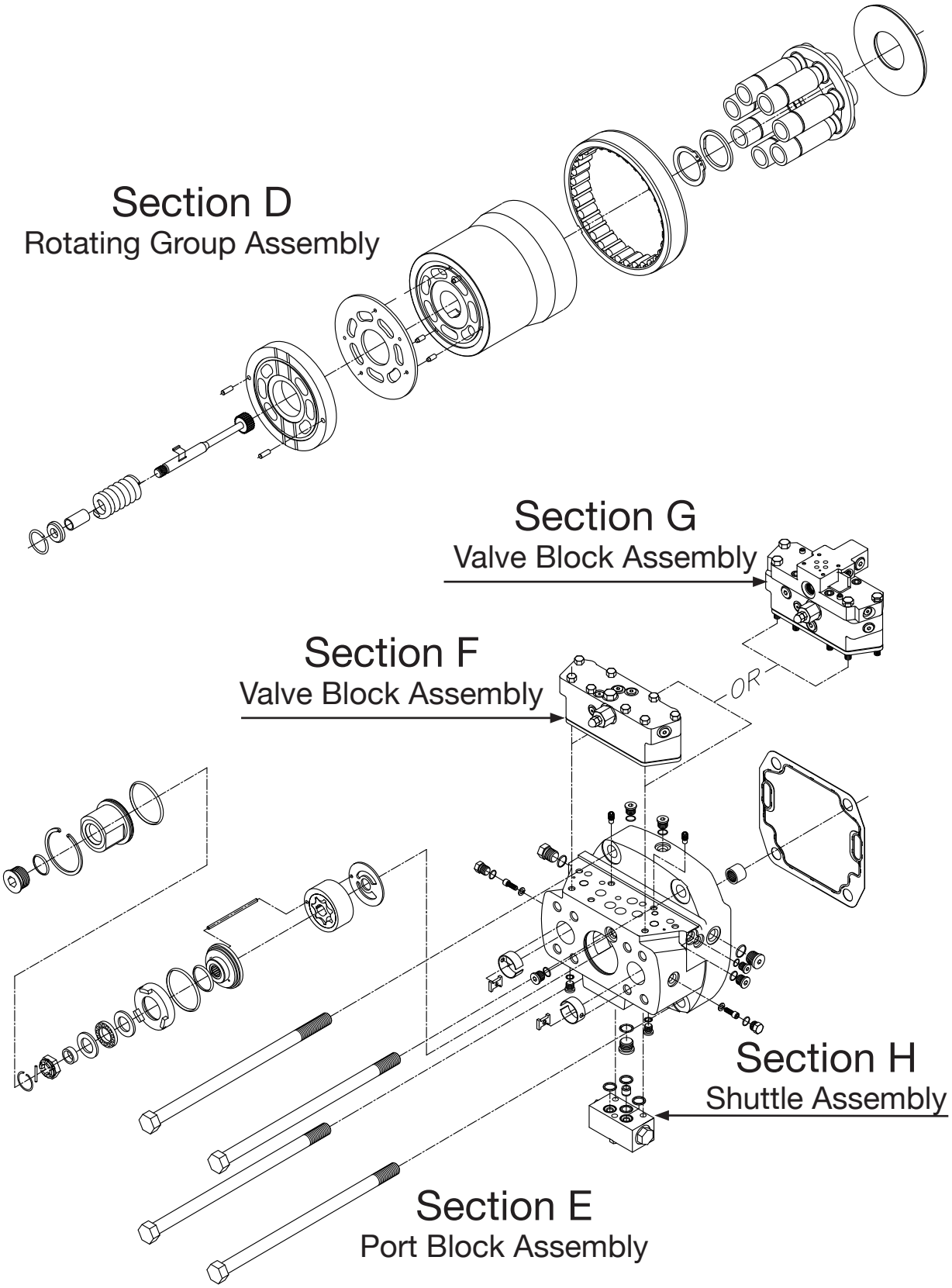
Section D
Rotating Group Assembly
Section G
Valve Block Assembly
Section F
Valve Block Assembly
OR
Section H
Shuttle Assembly
Section E
Port Block Assembly

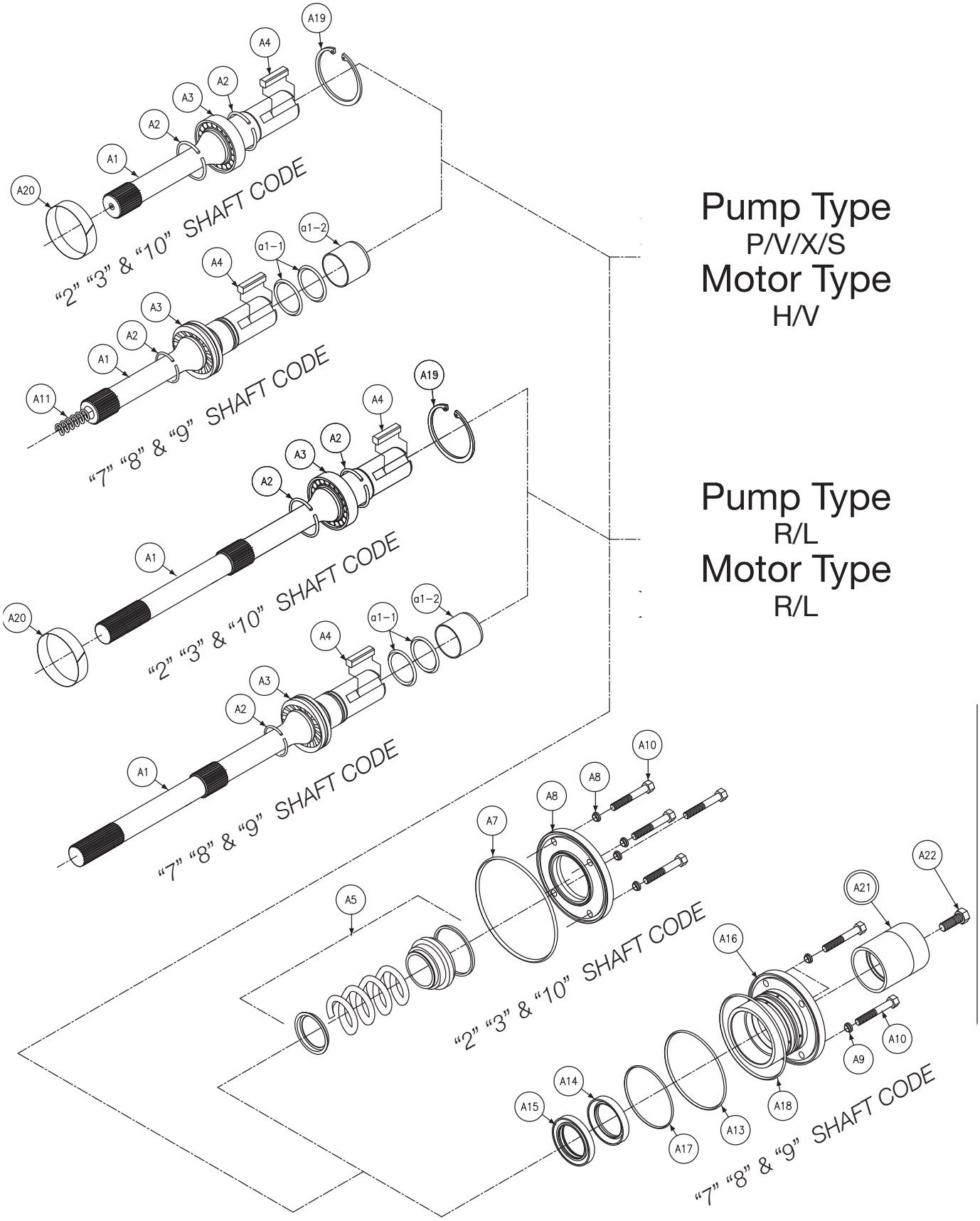

Pump Type
P/V/X/S
Motor Type
H/V

Pump Type
R/L
Motor Type
R/L

Section A P/M11/14 Input Shaft and Retainer Assembly								
Balloon #	Pump/ Motor	Type	Shaft Code	Rotation	Seal Code	Item #	Description	Qty
A1	P	P/V/X/S	2	**	**	033-71601-0	SHAFT KEYED	1
	M	V/H						
	P	P/V/X/S	3	**	**	033-71604-0	SHAFT SPLINED	
	M	V/H						
	P	P/V/X/S	7	**	**	*033-94180-0	SHAFT KEYED	
	M	V/H						
	P	P/V/X/S	8	**	**	*033-94181-0	SHAFT SPLINED	
	M	V/H						
	P	P/V/X/S	9	**	**	*033-94220-0	SHAFT KEYED	
	M	V/H						
	P	P/V/X/S	10	**	**	033-93608-0	SHAFT KEYED	
	M	V/H						
	P/M	R/L	2	**	**	033-92619-0	SHAFT KEYED	
	P/M	R/L	3	**	**	033-92619-0	SHAFT SPLINED	
	P/M	R/L	7	**	**	*033-04182-0	SHAFT KEYED	
	P/M	R/L	8	**	**	*033-94183-0	SHAFT SPLINED	
	P/M	R/L	9	**	**	*033-94221-0	SHAFT KEYED	
	P/M	R/L	10	**	**	033-93614-0	SHAFT KEYED	
a1-1	P	P/V/X/S/ R/L	7/8/9	**	1	671-00131-0	O RING	2
	M	V/H/R/L						
	P	P/V/X/S/ R/L	7/8/9	**	4	674-00131-0		
	M	V/H/R/L						
	P	P/V/X/S/ R/L	7/8/9	**	5	675-00131-0		
	M	V/H/R/L						
a1-2	P	P/V/X/S/ R/L	7/8/9	**	**	033-71492-0	SLEEVE	1
	M	V/H/R/L						
A2	P/M	**	2/3/10	**	**	033-71641-0	RETAINING RING	2
	P/M	**	7/8/9	**	**	033-59504-0		1
A3	P/M	**	2/3/10	**	**	230-82148-0	SHAFT BEARING	1
	P/M	**	7/8/9	**	**	230-82214-0		
A4	P/M	**	2/7	**	**	033-71514-0	KEY	1
	P/M	**	9/10	**	**	033-93618-0		
A5	P/M	**	2/3/10	**	1	623-00016-0	SHAFT SEAL	1
	P/M	**	2/3/10	**	4	623-00016-4		
	P/M	**	2/3/10	**	5	623-00016-5		

Continued on next page.

Section A P/M11/14 Input Shaft and Retainer Assembly								
Balloon #	**Pump/ Motor**	**Type**	**Shaft Code**	**Rotation**	**Seal Code**	**Item #**	**Description**	**Qty**
A7	P/M	**	2/3/10	**	1	671-00249-0	O RING	1
	P/M	**	2/3/10	**	4	674-00249-0		
	P/M	**	2/3/10	**	5	675-00249-0		
A8	P/M	**	2/3/10	**	**	033-57872-0	MECH SEAL RETAINER	1
A9	P/M	**	2/3/7/8/9/10	**	**	631-45007-0	GASKET	4
A10	P/M	**	2/3/7/8/9/10	**	**	306-40021-0	SCREW HHC	4
A11	P	P/V/X/S	7/8/9	**	**	033-91713-0	PRE=LOAD SPRING	1
A13	P	P/V/X/S/ R/L	7/8/9	**	1	671-00044-0	O RING	1
	M	V/H/R/L						
	P	P/V/X/S/ R/L	7/8/9	**	4	674-00044-0		
	M	V/H/R/L						
	P	P/V/X/S/ R/L	7/8/9	**	5	675-00044-0		
	M	V/H/R/L						
A14	P	P/V/X/S/ R/L	7/8/9	CW	**	620-82104-0	INNER SHAFT SEAL	1
	P	P/V/X/S/ R/L	7/8/9	CCW	**	620-82105-0		
	M	H/V/R/L	7/8/9	N	**	620-82116-0		
A15	P/M	**	7/8/9	**	**	620-82101-0	OUTER SHAFT SEAL	1
A16	P/M	**	7/8/9	**	**	033-91709-0	LIP SEAL RETAINER	1
A17	P/M	**	7/8/9	**	1	671-00237-0	O RING	1
	P/M	**	7/8/9	**	4	674-00237-0		
	P/M	**	7/8/9	**	5	675-00237-0		
A18	P/M	**	7/8/9	**	1	671-00251-0	O RING	1
	P/M	**	7/8/9	**	4	674-00251-0		
	P/M	**	7/8/9	**	5	675-00251-0		
A19	P/M	**	2/3/10	**	**	356-65013-0	RETAINING RING	1
A20	P/M	**	2/3/10	**	**	033-53984-0	BEARING SHIM .007**	SELECT FIT 1 ONLY
	P/M	**	2/3/10	**	**	033-53983-0	BEARING SHIM .008**	
A21	P/M	P/V/X/S/ R/L	7/8	**	**	S23-15221-0	RETAINER	1
			9			S23-19501-0		
A22	P/M	P/V/X/S/ R/L	7/8	**	**	363-12205-0	HHCS M12(1.75) x 55MM	1
			9			363-12195-0	HHCS M12(1.75) x 30MM	
A23	P/M	P/V/X/S/ R/L	7/8/9	**	**	345-10032-0	WASHER	1

NOTE: 1. ITEM NUMBERS MARKED WITH * ARE NOT USAABLE WITHOUT ITEMS a1-1 & a1-2 (O RINGS AND SLEEVE)
2. ITEMS A21, A22 AND A23 ONLY USED IN SHAFT AND SEAL RETAINER ASSEMBKY KITS.

Seal Kits Contain All Seals for the Following: NOTE: Seal kits for "M" mod pumps and for aux. pumps require part verification with HPD factory representatives. Standard Seal Kits below contain seals for the following: 1. Main Pump 2. Valve Block 3. Input/Output Controls 4. Shaft Seal					
Pump/ Motor	**Type**	**Shaft Code**	**Rotation**	**Seal Code**	**Part Number**
P	P/V/X/R	1/2/3	**	1	S23-17032-0
				4	S23-17032-4
				5	S23-17032-5
P	S/L	1/2/3	**	1	S23-17035-0
				5	S23-17035-5
P	P/V/X/R	7/8/9	CW	1	S23-17033-0
				4	S23-17033-4
				5	S23-17033-5
P	S/L	7/8/9	CW	1	S23-17036-0
				5	S23-17036-5
P	P/V/X/R	7/8/9	CCW	1	S23-17034-0
				4	S23-17034-4
				5	S23-17034-5
P	S/L	7/8/9	CCW	1	S23-17037-0
				5	S23-17037-5

11/14 Shaft, Shaft Sleeve and O ring							
Pump/ Motor	**Type**	**Shaft**	**Item**	**Seal Code**	**Part Number**	**Description**	**Qty**
P	P/V/S/X	7/8/9	a1-1	1	671-00131-0	O RING	2
M	H/V			4	674-00131-0		
				5	675-00131-0		
P	P/V/S/X	7	A	**	*033-94180-0	*SHAFT	1
M	H/V						
P	P/V/S/X	8		**	*033-94181-0	*SHAFT	1
M	H/V						
P	P/V/S/X	9		**	*033-94220-0	*SHAFT	1
M	H/V						
P/M	R/L	7		**	*033-94182-0	*SHAFT	1
P/M	R/L	8		**	*033-94183-0	*SHAFT	1
P/M	R/L	9		**	*033-94221-0	*SHAFT	1
P	P/V/S/X	7/8/9	a1-2	**	033-94184-0	SLEEVE	1
M	H/V						
P/M	R/L						
Note: Shaft P/N's, Item A, marked with * are not usable without o'ring, Item a1-1 and sleeve, Item a1-2							

P/M11/14 Shaft and Bearing Assembly Kits Composed of Items: A1, a1-1, a1-2, A2, A3 and A4 as applicable			
Pump/Motor	**Type**	**Shaft Code**	**Shaft Code**
P	P/V/S/X	2	S13-43969-0
M	H/V		
P	P/V/S/X	3	S13-43968-0
M	H/V		
P	P/V/S/X	7	*S23-18182-0
M	H/V		
P	P/V/S/X	8	*S23-18183-0
M	H/V		
P	P/V/S/X	9	*S23-18268-0
M	H/V		
P	P/V/S/X	10	S23-17489-0
M	H/V		
P/M	R/L	2	S23-16255-0
P/M	R/L	3	S23-16257-0
P/M	R/L	7	*S23-18184-0
P/M	R/L	8	*S23-18185-0
P/M	R/L	9	*S23-18269-0
P/M	R/L	10	S23-17495-0

*Replacement shaft sleeves & o rings are available for Pumps Type P/V/S/X/R/L and Motors Type H/V with 7/8/9 shafts. However special tool P/N 213-0-004203 is required to remove and install the sleeve.
Note: See Page 14 for tool details.

P/M11/14 Shaft and Seal Retainer Assembly Kits Composed of Items: A1, a1-1, a1-2, A2, A3, A4, A9, A10, A13, A14, A15, A16, A17, A18, A21, A22 and A23 as applicable					
Pump/Motor	**Type**	**Rotation**	**Seal Code**	**Shaft Code**	**Part Number**
P	P/V/S/X	CW	1	7	S23-15219-0
P	P/V/S/X	CW	1	8	S23-15923-0
P	P/V/S/X	CW	1	9	S23-19502-0
P	P/V/S/X	CW	5	7	S23-15219-5
P	P/V/S/X	CW	5	8	S23-15923-5
P	P/V/S/X	CW	5	9	S23-19502-5
P	P/V/S/X	CCW	1	7	S23-15350-0
P	P/V/S/X	CCW	1	8	S23-15891-0
P	P/V/S/X	CCW	1	9	S23-19503-0
P	P/V/S/X	CCW	5	7	S23-15350-5
P	P/V/S/X	CCW	5	8	S23-15891-5
P	P/V/S/X	CCW	5	9	S23-19503-5
P	R/L	CW	1	7	S23-16807-0
P	R/L	CW	1	8	S23-16805-0
P	R/L	CW	1	9	S23-19504-0
P	R/L	CW	5	7	S23-16807-5
P	R/L	CW	5	8	S23-16805-5
P	R/L	CW	5	9	S23-19504-5
P	R/L	CCW	1	7	S23-16808-0
P	R/L	CCW	1	8	S23-16806-0
P	R/L	CCW	1	9	S23-19505-0
P	R/L	CCW	5	7	S23-16808-5
P	R/L	CCW	5	8	S23-16806-5
P	R/L	CCW	5	9	S23-19505-5

P/M11/14 Seal Retainer Assembly Kits Composed of Items: A14, A15 and A16					
Pump/Motor	**Type**	**Shaft**	**Rotation**	**Seal Code**	**Part Number**
P	P/V/X/S/R/L	7/8/9	CW	1	S23-15215-0
P	P/V/X/S/R/L	7/8/9	CCW	1	S23-15217-0
M	H/V/R/L	7/8/9	N	1	S23-16041-0

MATERIAL: MEDIUM CARBON STEEL HEAT TREATED TO 27–34 Rc

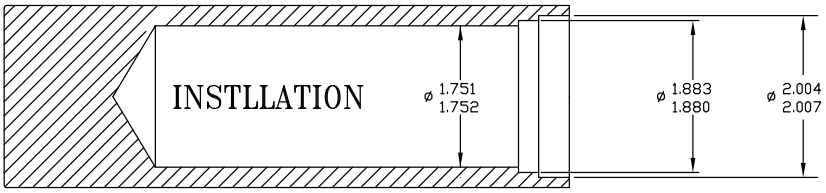

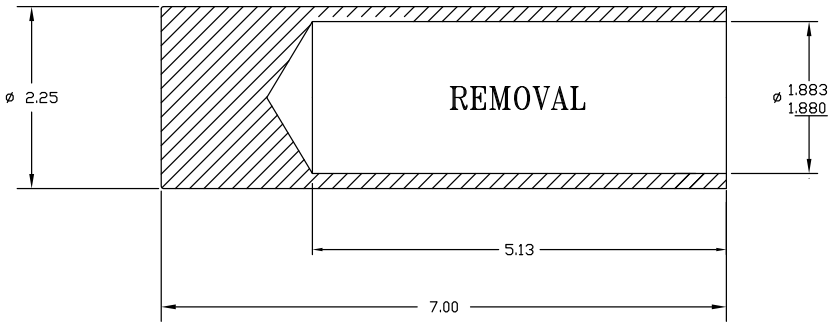

INSTALLATION

DO NOT HAMMER OR OTHERWISE IMPACT
APPLY A CONSTANT PRESSING FORCE ONLY

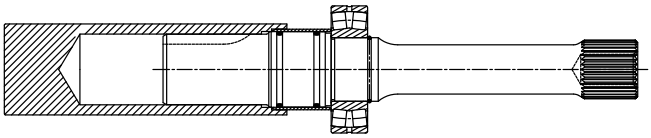

7 SHAFT

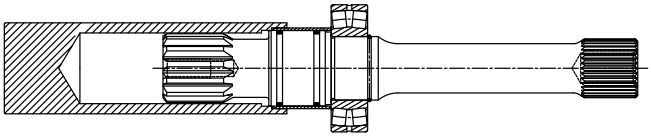

8 SHAFT

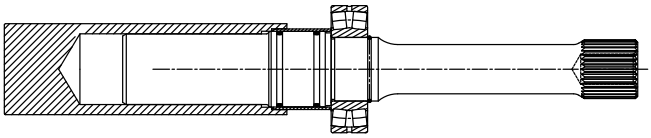

9 SHAFT

REMOVAL

DO NOT PRESS OFF BEARING USING SLEEVE
PRESS OFF BEARING AND THEN SLEEVE

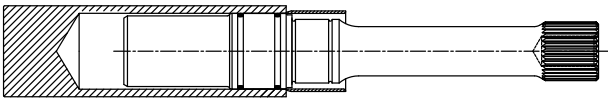

7 SHAFT

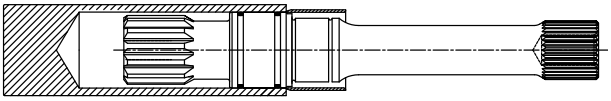

8 SHAFT

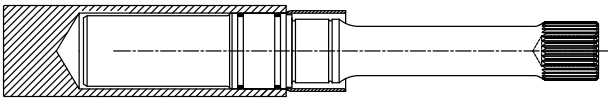

9 SHAFT

Pump Type
P/V/X/S/L/R
Motor Type
H/V/L/R

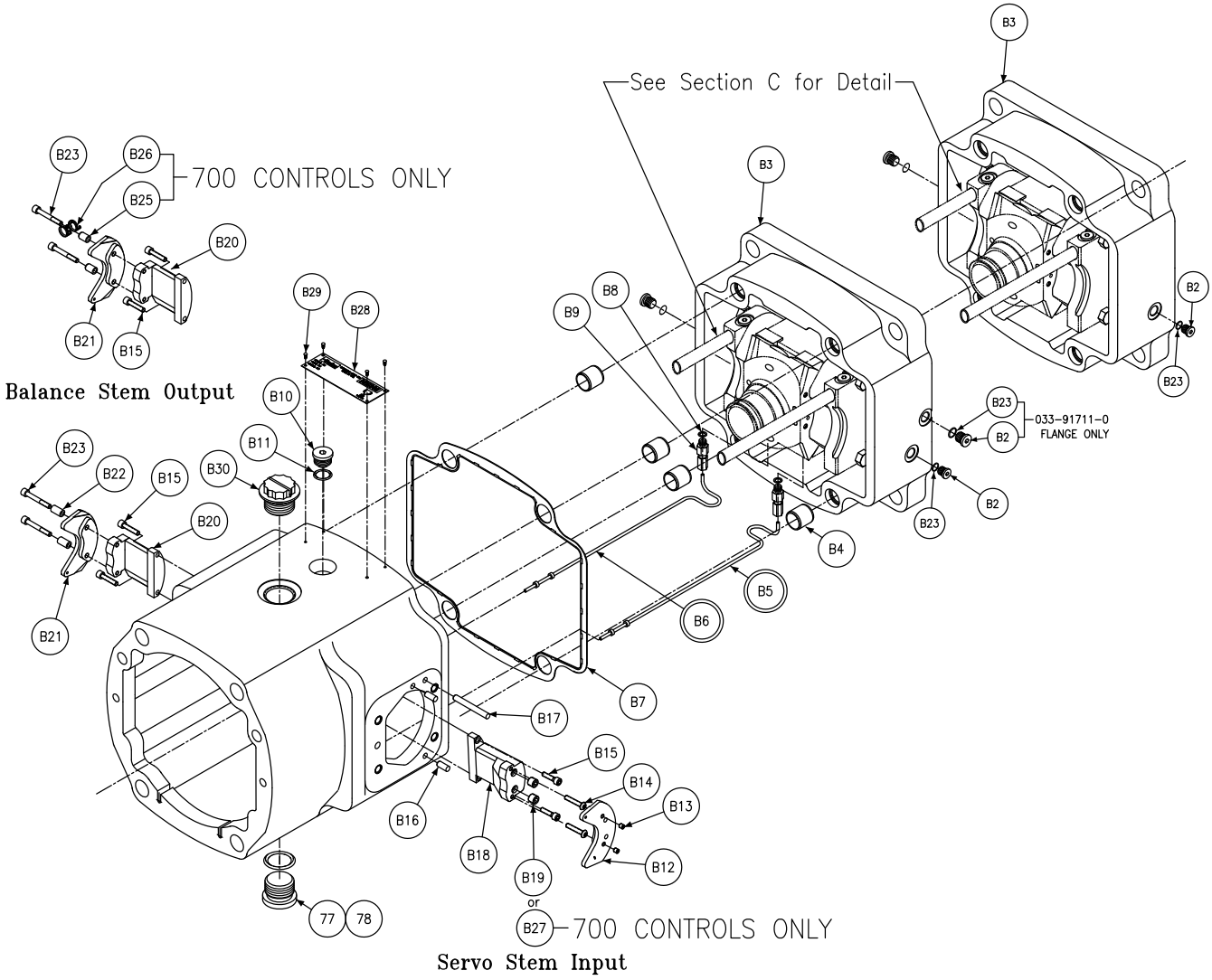

Note: Above view shows input on "a" side of pump.

Parker Hannifin Corporation
Hydraulic Pump and Power Systems Division
United States

Balloon #	Pump/ Motor	Type	Shaft Code	Seal Code	Item #	Description	Qty
B3	P	P/V/S/X/R/L	2/3/10	**	033-71546-0	MOUNTING FLANGE	1
	M	V/H/R/L					
	P	P/V/S/X/R/L	7/8/9	**	033-91711-0		
	M	V/H/R/L					
B4	P/M	**	**	**	033-72664-0	MOUNTING SLEEVE	4
B5	P/M	**	**	**	S13-43966-0	RIGHT FEED TUBE	1
B6	P/M	**	**	**	S13-43967-0	LEFT FEED TUBE	1
B7	P/M	**	**	**	033-91076-0	MTG FLG GASKET	1
B8	P/M	**	**	1	691-00902-0	O RING	2
	P/M	**	**	4	694-00902-0		
	P/M	**	**	5	695-00902-0		
B9	P/M	**	**	**	492-15265-0	CONNECTOR	2
B10	P/M	**	**	**	033-91106-0	RETAINER BEARING	1
B11	P/M	**	**	1	691-00908-0	O RING	1
	P/M	**	**	4	694-00908-0		
	P/M	**	**	5	695-00908-0		
B12	P/M	**	**	**	033-53874-0	SERVO INPUT PLATE	1
B13	P/M	**	**	**	312-09032-0	SCREW	2
B14	P/M	**	**	**	353-25073-0	SCREW BUTTON HD	2
B15	P/M	**	**	**	359-09240-0	SCREW SHC	4
B16	P/M	**	**	**	325-16320-0	ROLL PIN	2
B17	P/M	**	**	**	324-21608-0	DOWEL PIN	4
B18	P/M	**	**	**	033-71596-0	SERVO STEM	1
B19	P	P/S/X/R/L	**	**	036-20641-0	ORIFICE .062	2
	M	V/H/R/L					
	P	V	**	**	036-20641-0		1
B20	P	P/V/S/X/R/L	**	**	033-71616-0	BALANCE STEM	1
	M	V/H/R/L					
B21	P/M	**	**	**	033-70546-0	BALANCE PLATE	1
B22	P/M	**	**	**	033-71247-0	SPACER	2
B23	P/M	**	**	**	359-09180-0	SCREW SHC	2
B24	P/M	**	**	**	033-91191-0	HOUSING VV	1
B25	P	P/S/X/R/L	**	**	033-57270-0	SPACER	2
B26	P	P/S/X/R/L	**	**	033-57271-0	FEEDBACK SPRING	1

Continued on next page.

Balloon #	Pump/ Motor	Type	Shaft Code	Seal Code	Item #	Description	Qty
B27	P	P/S/X/R/L	**	**	033-93765-0	ORIFICE .043	2
B28	P	P/V/S/X/R/L	**	**	033-71907-0	NAMEPLATE	1
	M	V/H/R/L	**	**	033-71908-0		
B29	P/M	**	**	**	320-10203-0	DRIVE SCREW	4
B30	P/M	**	**	**	449-00019-0	SHIPPING PLUG	1

Stem Kits Input Stem Kits Include the Following: B12, B13, B14, B15, B18 and B19 Input Stem Kits for 700 Control Include the Following: B12, B13, B14, B15, B18 and B27 Output Stem Kits Include the Following: B15, B20, B21, B22 and B23 Output Stem Kits for 700 Control Include the Following: B15, B20, B21, B23, B25 and B26	
Description	**Part Number**
Pump and Motor 11/14 Input Stem Kit	S23-12276-0
Pump and Motor 11/14 Output Stem Kit	S23-03782-0
Pump 11/14 Input Stem Kit for 700 Control	S23-03781-0
Pump 11/14 **V** Input Stem Kit	S23-17876-0
Pump 11/14 Output Stem Kit for 700 Control	S23-03948-0

Parker Hannifin Corporation
Hydraulic Pump and Power Systems Division
United States

Pump Type
P/V/X/S/R/L
Motor Type
H/V/R/L

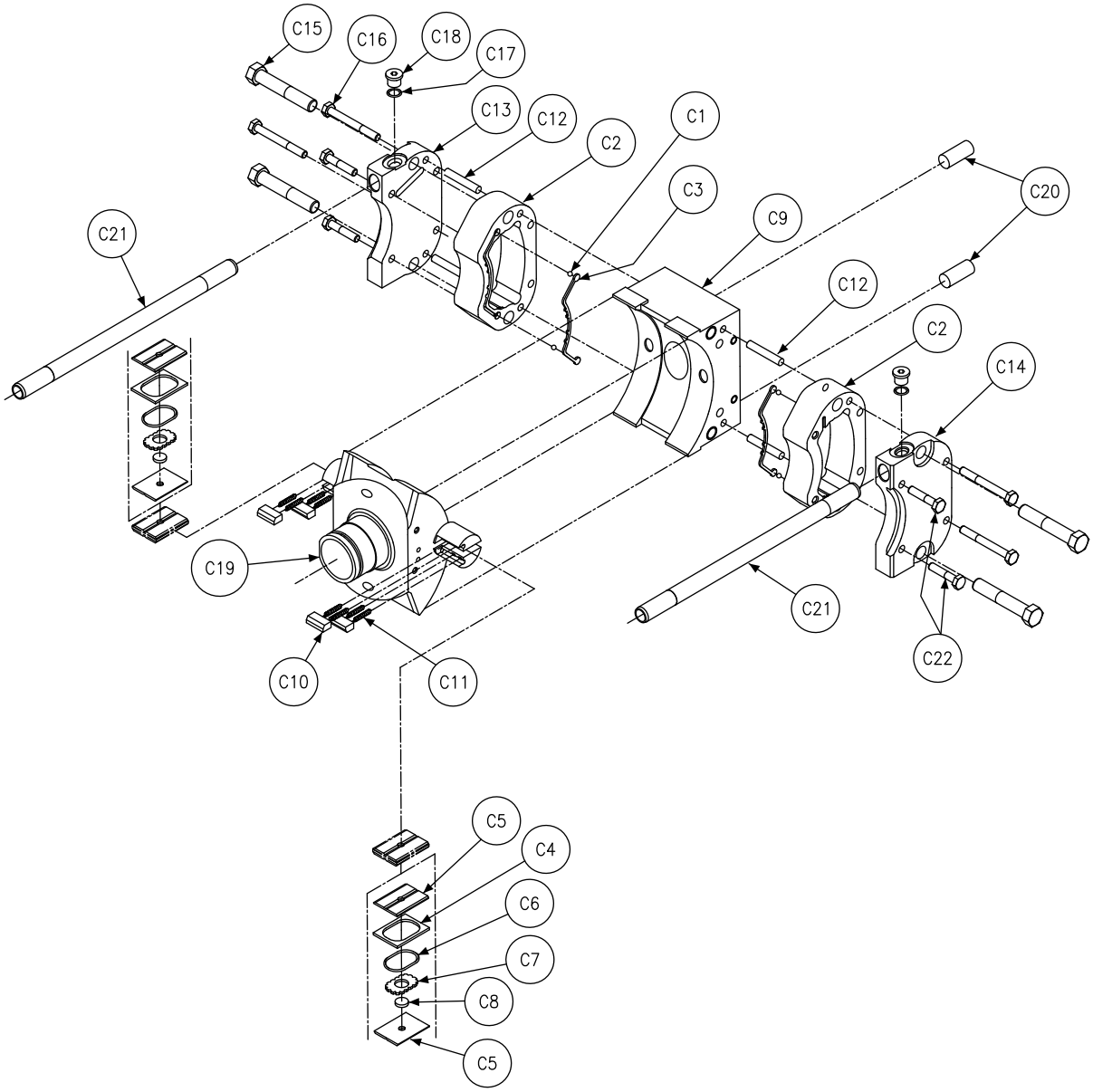

Parker Hannifin Corporation
Hydraulic Pump and Power Systems Division
United States

Section C 11/14 Cam and Cradle Assembly								
Balloon #	**Pump/ Motor**	**Type**	**Shaft Code**	**Rotation**	**Seal Code**	**Item #**	**Description**	**Qty**
C1	P/M	P/V/X/S/L/R/H	2/3/7/8/9/10	**	**	201-06001-0	CHECK BALL	4
C2	P/M	P/V/X/S/L/R/H	2/3/7/8/9/10	**	**	033-71615-0	VANE CHAMBER	2
C3	P/M	P/V/X/S/L/R/H	2/3/7/8/9/10	**	1	606-25040-0	MOLDED SEAL	2
					4	606-25040-4		
					5	606-25040-5		
C4	P/M	P/V/X/S/L/R/H	2/3/7/8/9/10	**	**	033-71611-0	VANE SEAL	2
C5	P/M	P/V/X/S/L/R/H	2/3/7/8/9/10	**		033-71608-0	VANE SEAL BACKUP PLATE	4
C6	P/M	P/V/X/S/L/R/H	2/3/7/8/9/10	**	1	691-00125-0	O RING	2
					4	694-00125-0		
					5	695-00125-0		
C7	P/M	P/V/X/S/L/R/H	2/3/7/8/9/10	**	**	033-71607-0	VANE SPACER	2
C8	P/M	P/V/X/S/L/R/H	2/3/7/8/9/10	**	**	033-70803-0	CHECK VALVE	2
C9	P/M	P/V/X/S/L/R/H	2/3/10	**	**	033-57879-0	ROCKER CRADLE	1
			7/8/9			033-91712-0		
C10	P/M	P/V/X/S/L/R/H	2/3/7/8/9/10	**	**	033-72234-0	VANE HOLDDOWN	4
C11	P/M	P/V/X/S/L/R/H	2/3/7/8/9/10	**	**	033-72233-0	SPRING HOLDDOWN	8
C12	P/M	P/V/X/S/L/R/H	2/3/7/8/9/10	**	**	324-22428-0	DOWEL PIN	4
C13	P	P/D/V/X/S/L/R	2/3/7/8/9/10	CCW	**	033-71595-0	RIGHT CONTROL COVER	1
	P	P/D/V/X/S/L/R		CW		033-71598-0		
	M	V/H		N				
C14	P	P/D/V/X/S/L/R	2/3/7/8/9/10	CCW	**	033-71593-0	LEFT CONTROL COVER	1
	P	P/D/V/X/S/L/R		CW		033-71597-0		
	M	V/H		N				
C15	P/M	P/V/X/S/L/R/H	2/3/7/8/9/10	**	**	306-40189-0	HHCS 1/2-13 UNC X 3	4
C16	P/M	P/V/X/S/L/R/H	2/3/7/8/9/10	**	**	306-40140-0	HHCS 3/8-16 UNC X 2 3/4	4
C17	P/M	P/V/X/S/L/R/H	2/3/7/8/9/10	**	1	691-00905-0	O RING	2
				**	4	694-00905-0		
				**	5	695-00905-0		
C18	P/M	P/V/X/S/L/R/H	2/3/7/8/9/10	**	**	488-35020-0	HEX SOCKET PLUG	2
C19	P/M	P/V/X/S/L/R/H	2/3/7/8/9/10	**	**	S23-12107-0	CAM ROCKER	1
C20	P/M	P/V/X/S/L/R/H	2/3/7/8/9/10	**	**	324-23216-0	DOWEL PIN	2
C21	P/M	P/V/X/S/L/R/H	2/3/7/8/9/10	**	**	033-71609-0	OVERRIDE TUBE	2

P/M11/14 Cam & Cradle Assembly Kits Includes Items C1 Thru C22				
Pump/Motor	**Type**	**Shaft Code**	**Rotation**	**Part Number**
P	P/V/X/S	2/3/10	CW	S23-17240-0
P	P/V/X/S	2/3/10	CCW	S23-17241-0
M	H/V	2/3/10	N	S23-17240-0
P	P/V/X/S	7/8/9	CW	S23-18966-0
P	P/V/X/S	7/8/9	CCW	S23-18967-0
M	H/V	7/8/9	N	S23-18966-0

Pump Type
P/V/X/S
Motor Type
H/V

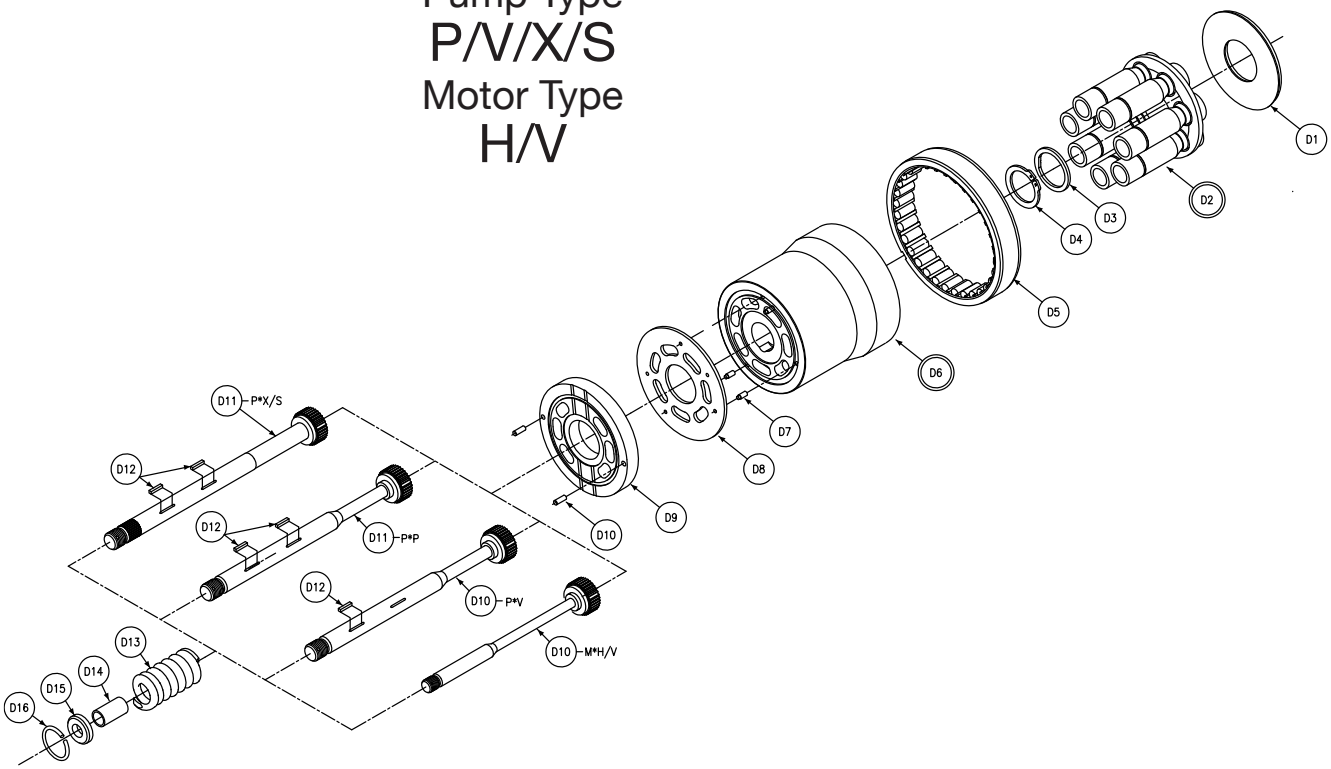

Pump Type
R/L
Motor Type
R/L

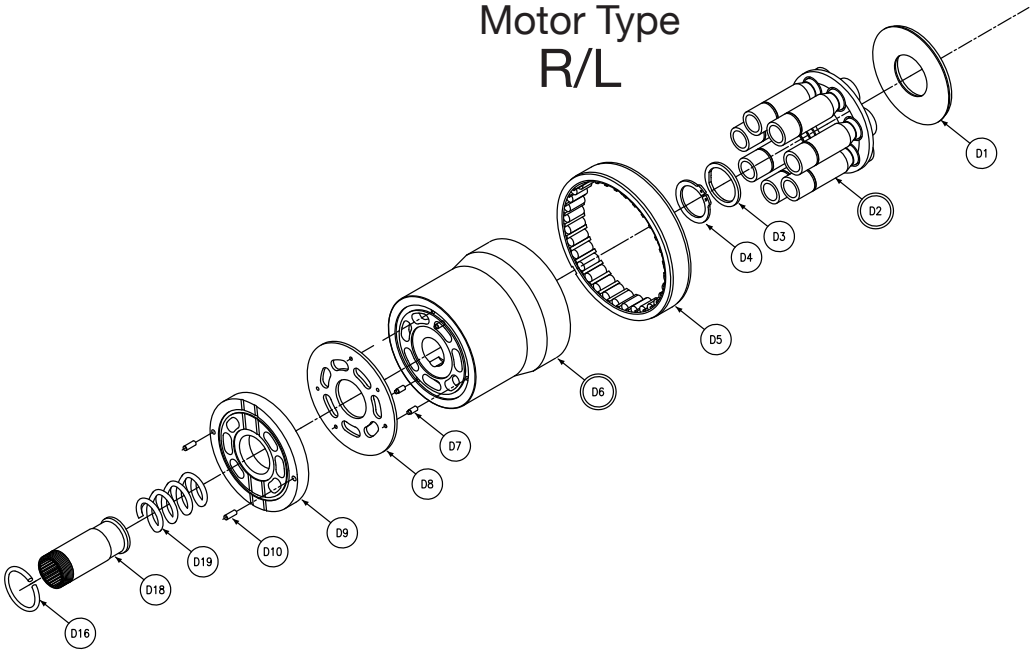

Parker Hannifin Corporation
Hydraulic Pump and Power Systems Division
United States

Section D 11/14 Rotating Group							
Balloon #	**Displacement**	**Pump/ Motor**	**Type**	**Rotation**	**Item #**	**Description**	**Qty**
D1	**	P	P/V/X/S/L/R	**	033-71569-0	CREEP PLATE	1
	**	M	H/V/R/L				
D2	11	P	P/X/S/L/R	**	S13-45544-0	PISTON SHOE & RETAINER ASSEMBLY	1
		M	H/V/R/L	**			
	14	P	P/X/S/L/R/H	**	S13-43970-0		
		M	H/V/R/L	**			
D3	**	P	P/V/X/S/L/R	**	033-91706-0	THRUST WASHER	1
	**	M	H/V/R/L	**			
D4	**	P/M	P/V/X/S/L/R/H	**	033-71556-0	RET RING - .109/.107 THK YELLOW	SELECT FIT ONE ONLY
	**	P/M	P/V/X/S/L/R/H	**	033-71557-0	RET RING - .107/.105 THK GREEN	
	**	P/M	P/V/X/S/L/R/H	**	033-71558-0	RET RING - .105/.103 THK RED	
	**	P/M	P/V/X/S/L/R/H	**	033-71559-0	RET RING - .103/.101 THK BLUE	
	**	P/M	P/V/X/S/L/R/H	**	035-91231-0	RET RING - .100/.098 THK WHITE	
D5	**	P/M	P/V/X/S/L/R/H	**	033-91190-0	BARREL BEARING	1
D6	11	P/M	P/V/X/S/L/R/H	**	S13-45381-0	CYLINDER BARREL	1
	14	P/M	P/V/X/S/L/R/H	**	S13-43965-0		
D7	**	P/M	P/V/X/S/L/R/H	**	033-49825-0	FACE PLATE PIN	3
D8	11	P/M	P/V/X/S/L/R/H	**	033-71921-0	FACE PLATE	1
	14	P/M	P/V/X/S/L/R/H	**	033-71575-0		
D9	11	P	P/X/S/L/R	CW	033-71915-0	PORT PLATE	1
	11	P	P/X/S/L/R	CCW	033-71914-0		
	14	P	P/X/S/L/R	CW	033-71617-0		
	14	P	P/X/S/L/R	CCW	033-71600-0		
	11	M	H/V/L/R	N	033-71551-0		
	14	M	H/V/L/R	N	033-71916-0		
	11	P	V	CW	031-91195-0		
	11	P	V	CCW	031-91224-0		
	14	P	V	CW	031-91241-0		
	14	P	V	CCW	031-91242-0		
D10	**	P/M	P/V/X/S/L/R/H	**	324-21910-0	DOWEL PIN	2

Continued on next page.

Section D 11/14 Rotating Group							
Balloon #	Displacement	Pump/ Motor	Type	Rotation	Item #	Description	Qty
D11	**	P	P/V	**	033-71603-0	AUXILIARY SHAFT	1
	**	P	S/X	**	033-91053-0		
	**	M	H/V	**	033-71573-0		
D12	**	P	V	**	211-22034-0	SQUARE KEY	1
	**	P	P/S/X	**			2
	**	M	H/V	**			2
D13	**	P	P/V/X/S	**	033-71562-0	HOLDDOWN SPRING	1
	**	M	H/V	**			
D14	**	P	P/V/X/S	**	033-71561-0	BARREL STOP	1
	**	M	H/V	**			
D15	**	P/M	P/V/X/S/H	**	033-71560-0	SPRING RETAINER	1
D16	**	P/M	P/V/X/S/H	**	033-71564-0	RETAINING RING	1
D18	**	P/M	R/L	**	033-92687-0	HOLDDOWN SLEEVE	1
D19	**	P/M	R/L	**	033-92686-0	HOLDDOWN SPRING	1

Major Rotating Group Kits Composed of Items: D1, D2, D5, D6, D7, D8, D9 and D10				
Displacement	Pump/ Motor	Type	Rotation	Part number
11	P	P/X/S/ R/L	CW	S23-17101-0
11	P	P/X/S/ R/L	CCW	S23-17102-0
11	P	V	CW	S23-17105-0
11	P	V	CCW	S23-17106-0
14	P	P/X/S/ R/L	CW	S23-17103-0
14	P	P/X/S/ R/L	CCW	S23-17104-0
14	P	V	CW	S23-17107-0
14	P	V	CCW	S23-17108-0
11	M	H/V/R/L	N	S23-17109-0
14	M	H/V/R/L	N	S23-17110-0

Barrel Holddown Kits Composed of Items: D11, D13, D14, D15 and D16 For P/V/X/S/H No Kit Available for R/L Versions			
Displacement	Pump/ Motor	Type	Part Number
11/14	P	P/V	S23-17250-0
11/14	P	X/S	S23-17251-0
11/14	M	H/V	S23-17252-0

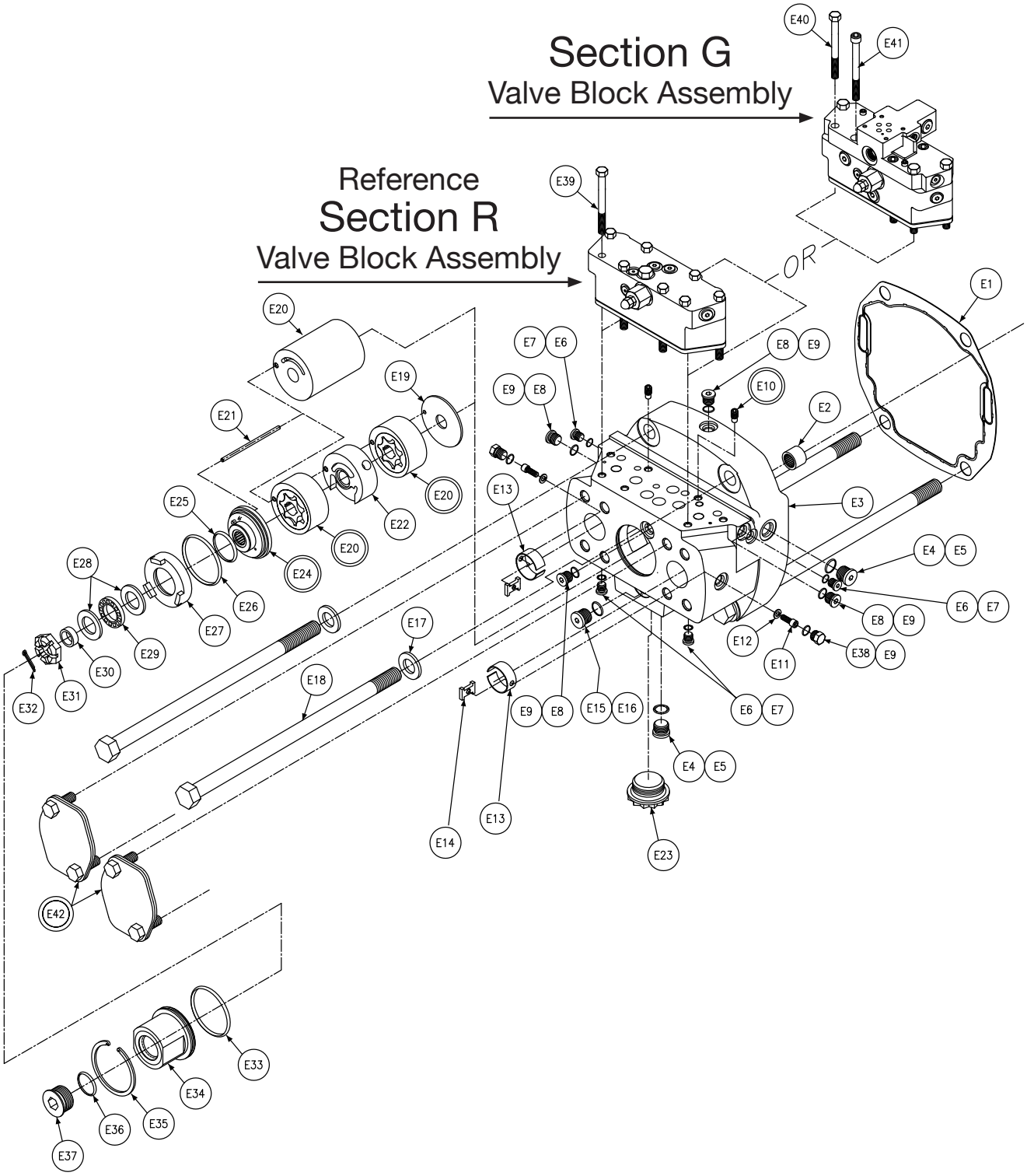

Parker Hannifin Corporation
Hydraulic Pump and Power Systems Division
United States

Section E P11/14 P Port Block								
Balloon #	Pump/ Motor	Type	Rotation	Seal Code	Internal Pump	Item #	Description	Qty
E1	P	P	**	**	0/X	033-91079-0	PORT BLOCK GASKET	1
E2	P	P	**	**	0/X	230-82146-0	NEEDLE BEARING	1
E3	P	P	**	**	0/X	033-57912-0	PORT BLOCK	1
E4	P	P	**	**	0/X	488-35018-0	HEX HD PLUG	2
E5	P	P	**	1	0/X	691-00908-0	O RING	2
	P	P	**	4	0/X	694-00908-0		
	P	P	**	5	0/X	695-00908-0		
E6	P	P	**	**	0/X	488-35001-0	PLUG	4
E7	P	P	**	1	0/X	691-00904-0	O RING	4
	P	P		4	0/X	694-00904-0		
	P	P		5	0/X	695-00904-0		
E8	P	P	**	**	0/X	488-35041-0	PLUG	4
E9	P	P	**	1	0/X	691-00906-0	O RING	6
	P	P		4	0/X	694-00906-0		
	P	P		5	0/X	695-00906-0		
E10	P	P	**	**	0/X	S13-40266-0	CHECK VALVE ASSY	2
E11	P	P	**	**	0/X	033-70908-0	SCREW	2
E12	P	P	**	**	0/X	348-10016-0	LOCK WASHER	2
E13	P	P	**	**	0/X	033-70502-0	RING CHECK	2
E14	P	P	**	**	0/X	033-70489-0	CLAMP 6.0__	2
E15	P	P	**	**	0/X	488-35055-0	PLUG	1
E16	P	P	**	**	0/X	691-00910-0	O RING	1
	P	P			0/X	694-00910-0		
	P	P			0/X	695-00910-0		
E17	P	P	**	**	0/X	350-10109-0	WASHER	4
E18	P	P	**	**	0/X	306-40172-0	HHCS 3/4-10 UNC X 13	4
E19	P	P	**	**	0	033-71619-0	SIDE PLATE	1
E20	P	P	**	**	0	S13-43334-0	ECCENTRIC RING & GERO-TOR	2
	P	P	**	**	X	033-53758-0	PLUG GEROTOR	1
E21	P	P	**	**	0/X	033-71620-0	DOWEL PIN	1
E22	P	P	**	**	0	S13-43963-0	CENTER PORT PLATE ASSY	1
E23	P	P	**	**	0/X	449-00020-0	SHIPPING PLUG	1

Continued on next page.

Parker Hannifin Corporation
Hydraulic Pump and Power Systems Division
United States

Section E P11/14 P Port Block								
Balloon #	Pump/ Motor	Type	Rotation	Seal Code	Internal Pump	Item #	Description	Qty
E24	P	P	CW	**	0/X	S13-46762-0	SIDE PLATE AND BEARING	1
	P	P	CCW	**	0/X	S13-46763-0		
E25	P	P	**	1	0/X	671-00129-0	O RING	1
	P	P	**	4	0/X	674-00129-0		
	P	P	**	5	0/X	675-00129-0		
E26	P	P	**	1	0/X	671-00144-0	O RING	1
	P	P	**	4	0/X	674-00144-0		
	P	P	**	5	0/X	675-00144-0		
E27	P	P	**	**	0/X	033-70531-0	PRESSURE PLATE	1
E28	P	P	**	**	0/X	350-10081-0	THRUST WASHER	2
E29	P	P	**	**	0/X	230-82164-0	THRUST BEARING	1
E30	P	P	**	**	0/X	033-72101-0	RING SEAL	1
E31	P	P	**	**	0/X	033-72026-0	HOLDDOWN NUT	1
E32	P	P	**	**	0/X	322-04324-0	COTTER PIN	1
E33	P	P	**	1	0/X	671-00147-0	O RING	1
	P	P	**	4	0/X	674-00147-0		
	P	P	**	5	0/X	675-00147-0		
E34	P	P	**	**	0/X	033-72100-0	AUXILIARY END COVER	1
E35	P	P	**	**	0/X	356-65082-0	RETAINING RING	1
E36	P	P	**	1	0/X	691-00916-0	O RING	1
	P	P	**	4	0/X	694-00916-0		
	P	P	**	5	0/X	695-00916-0		
E37	P	P	**	**	0/X	488-35024-0	HEX SOCKET PLUG	1
E38	P	P	**	**	0/X	488-35003-0	HEX HD PLUG	2
E39	P	P	**	**	0/X	306-40242-0	SCREW HHC 3/8-16UNC x 3-1/4	8
E40	P	P	**	**	0/X	306-40132-0	SCREW HHC 3/8-16 UNC x 4 1/4	4
E41	P	P	**	**	0/X	358-16360-0	SCREW SHC 3/8-16 UNC x 4	4
E42	P	P	**	**	0/X	S13-26133-0	ASSY SHIPPING COVER	2

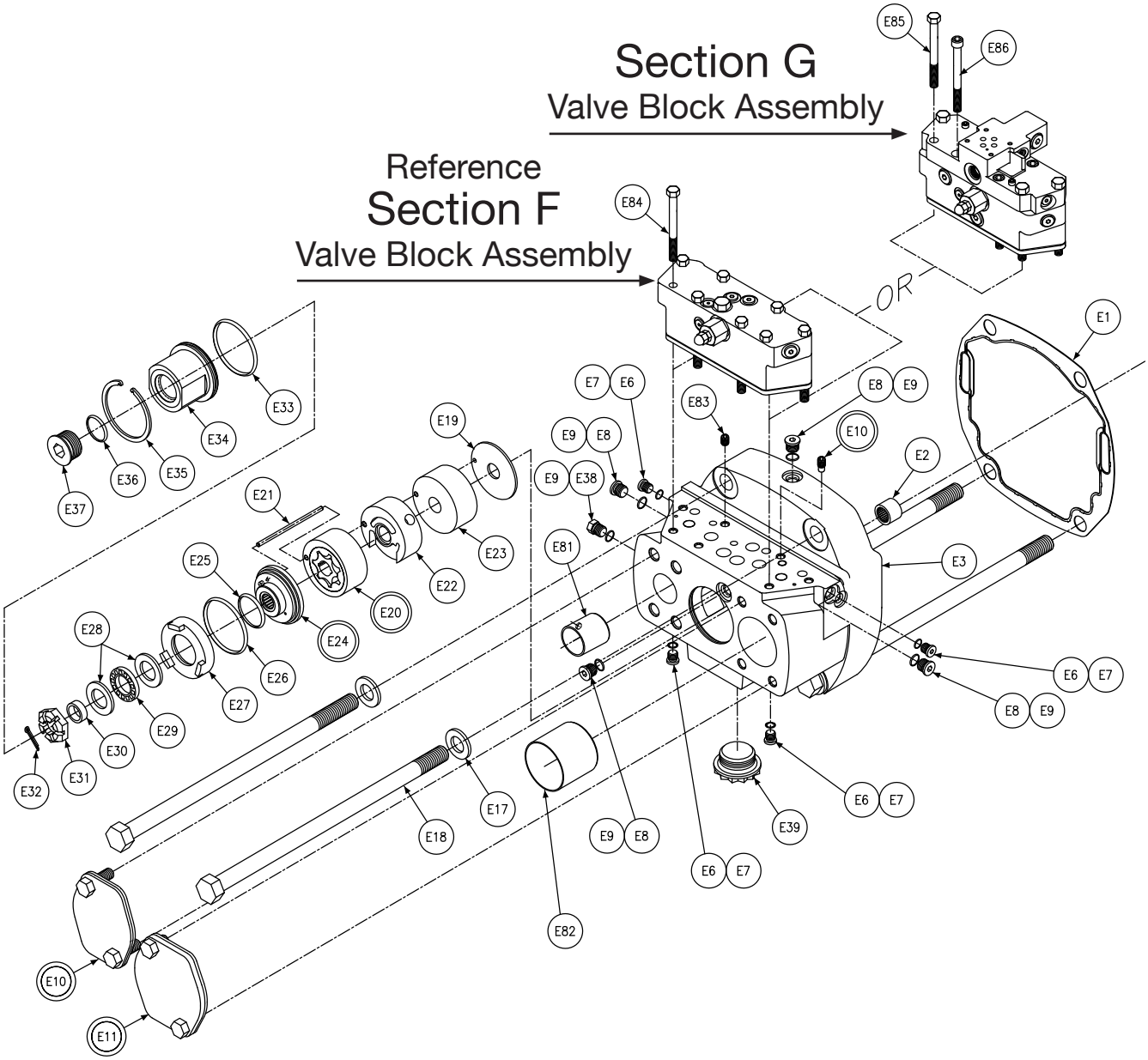

Parker Hannifin Corporation
Hydraulic Pump and Power Systems Division
United States

Section E P6/7/8 V Port Block					
Balloon #	**Rotation**	**Seal Code**	**Item #**	**Description**	**Qty**
E1	**	**	033-91079-0	GASKET PORT BLOCK	1
E2	**	**	230-82146-0	NEEDLE BEARING	1
E3	**	**	033-91194-0	PORT BLOCK	1
E6	**	**	488-35001-0	PLUG	4
E7	**	1	691-00904-0	O RING	4
	**	4	694-00904-0		
	**	5	695-00904-0		
E8	**	**	488-35041-0	PLUG	4
E9	**	1	691-00906-0	O RING	5
	**	4	674-00906-0		
	**	5	695-00906-0		
E10	**	**	S13-26133-0	ASSY SHIPPING COVER 1 1/2	1
E11	**	**	S15-28201-0	ASSY SHIPPING COVER 2 1/2	1
E17	**	**	350-10109-0	WASHER	4
E18	**	**	306-40172-0	HHCS 3/4-10 UNC X 13	4
E19	**	**	033-71619-0	SIDE PLATE	1
E20	**	**	S13-43334-0	ECCENTRIC RING AND GEROTOR	1
E21	**	**	033-71620-0	DOWEL PIN	1
E22	**	**	S13-43963-0	CENTER PORT PLATE	1
E23	**	**	033-72620-0	GEROTOR PLUG	1
E24	CW	**	S13-46762-0	SIDE PLATE AND BEARING	1
	CCW	**	S13-46763-0		
E25	**	1	671-00129-0	O RING	1
	**	4	674-00129-0		
	**	5	675-00129-0		
E26	**	1	671-00144-0	O RING	1
	**	4	674-00144-0		
	**	5	675-00144-0		
E27	**	**	033-70531-0	PRESSURE PLATE	1
E28	**	**	350-10081-0	THRUST WASHER	2
E29	**	**	230-82164-0	THRUST BEARING	1
E30	**	**	033-72101-0	RING SEAL	1
E31	**	**	033-72026-0	HOLDDOWN NUT	1
E32	**	**	322-04324-0	COTTER PIN	1

Continued on next page.

Section E P6/7/8 V Port Block					
Balloon #	**Rotation**	**Seal Code**	**Item #**	**Description**	**Qty**
E33	**	1	671-00147-0	O RING	1
	**	4	674-00147-0		
	**	5	675-00147-0		
E34	**	**	033-72100-0	AUXILIARY END COVER	1
E35	**	**	356-65082-0	RETAINING RING	1
E36	**	1	691-00916-0	O RING	1
	**	4	694-00916-0		
	**	5	695-00916-0		
E37	**	**	488-35024-0	PLUG	1
E38	**	**	488-35003-0	PLUG	1
E39	**	**	449-00020-0	SHIPPING PLUG	1
E81	**	**	033-57893-0	SOLID CHECK 1.5 INCH	1
E82	**	**	033-57324-0	SOLID CHECK 2.5 INCH	1
E83	**	**	353-25037-0	SCREW HEX SOCKET	1
E84	**	**	306-40242-0	HHCS 3/8-16UNC X 3-1/4	8
E85	**	**	306-40235-0	HHCS 3/8-16UNC X 5-1/2	4
E86	**	**	358-16360-0	SHCS 3/8-16 UNC X 4	4

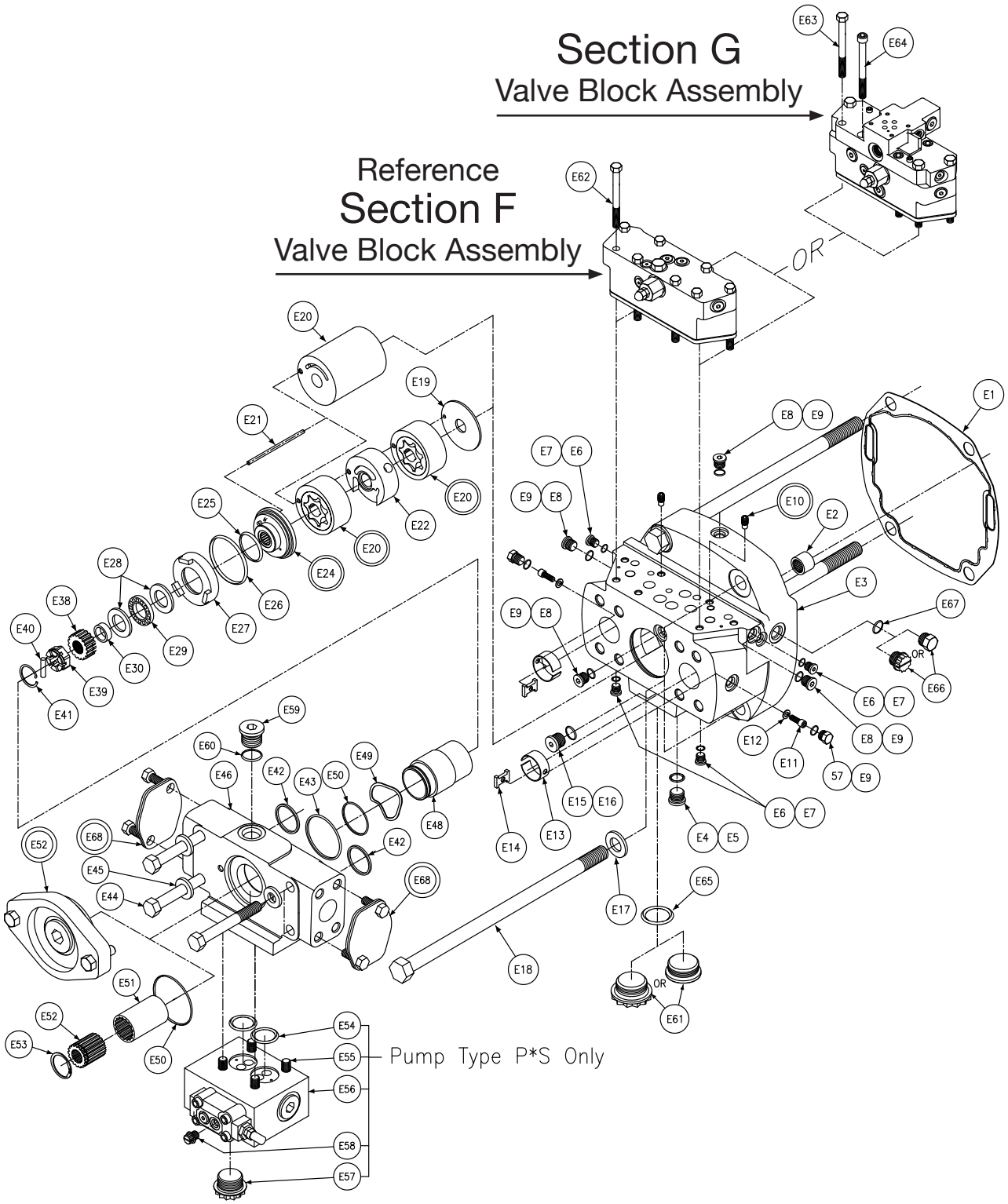

Parker Hannifin Corporation
Hydraulic Pump and Power Systems Division
United States

Section E P11/14 S/X Port Block									
Balloon #	Pump/ Motor	Type	Rotation	Seal Code	Internal Pump	Thru Drive	Item #	Description	Qty
E1	P	S/X	**	**	0/X	**	033-91079-0	PORT BLOCK GASKET	1
E2	P	S/X	**	**	0/X	**	230-82146-0	NEEDLE BEARING	1
E3	P	S/X	**	**	0/X	**	033-57912-0	PORT BLOCK	1
E4	P	S/X	**	**	0/X	**	488-35018-0	HEX HD PLUG	1
E5	P	S/X	**	1	0/X	**	691-00908-0	O RING	1
				4	0/X	**	694-00908-0		
				5	0/X	**	695-00908-0		
E6	P	S/X	**	**	0/X	**	488-35001-0	PLUG	4
E7	P	S/X	**	1	0/X	**	691-00904-0	O RING	4
				4	0/X		694-00904-0		
				5	0/X		695-00904-0		
E8	P	S/X	**	**	0/X	**	488-35041-0	PLUG	4
E9	P	S/X	**	1	0/X	**	691-00906-0	O RING	6
				4	0/X		694-00906-0		
				5	0/X		695-00906-0		
E10	P	S/X	**	**	0/X	**	S13-40266-0	CHECK VALVE ASSY	2
E11	P	S/X	**	**	0/X	**	033-70908-0	SCREW	2
E12	P	S/X	**	**	0/X	**	348-10016-0	LOCK WASHER	2
E13	P	S/X	**	**	0/X	**	033-70502-0	RING CHECK	2
E14	P	S/X	**	**	0/X	**	033-70489-0	CLAMP 6.0__	2
E15	P	S/X	**	**	0/X	**	488-35055-0	PLUG	1
E16	P	S/X	**	1	0/X	**	691-00910-0	O RING	1
				4	0/X	**	694-00910-0		
				5	0/X	**	695-00910-0		
E17	P	S/X	**	**	0/X	**	350-10109-0	WASHER	4
E18	P	S/X	**	**	0/X	**	306-40172-0	HHCS 3/4-10 UNC X 13	4
E19	P	S/X	**	**	0	**	033-71619-0	SIDE PLATE	1
E20	P	S/X	**	**	0	**	S13-43334-0	ECCENTRIC RING & GEROTOR	2
	P	S/X	**	**	X	**	033-53758-0	PLUG GEROTOR	1
E21	P	S/X	**	**	0/X	**	033-71620-0	DOWEL PIN	1
E22	P	S/X	**	**	0	**	S13-43963-0	CENTER PORT PLATE ASSY	1
E24	P	S/X	CW	**	0/X	**	S13-46762-0	SIDE PLATE AND BEARING	1
	P	S/X	CCW	**	0/X	**	S13-46763-0		
E25	P	S/X	**	1	0/X	**	671-00129-0	O RING	1
				4	0/X	**	674-00129-0		
				5	0/X	**	675-00129-0		

Continued on next page.

Parker Hannifin Corporation
Hydraulic Pump and Power Systems Division
United States

Section E P11/14 S/X Port Block									
Balloon #	Pump/ Motor	Type	Rotation	Seal Code	Internal Pump	Thru Drive	Item #	Description	Qty
E26	P	S/X	**	1	0/X	**	671-00144-0	O RING	1
				4	0/X	**	674-00144-0		
				5	0/X	**	675-00144-0		
E27	P	S/X	**	**	0/X	**	033-70531-0	PRESSURE PLATE	1
E28	P	S/X	**	**	0/X	**	350-10081-0	THRUST WASHER	2
E29	P	S/X	**	**	0/X	**	230-82164-0	THRUST BEARING	1
E30	P	S/X	**	**	0/X	**	033-72101-0	RING SEAL	1
E38	P	S/X	**	**	0/X	**	033-91051-0	INSERT SPLINE	1
E39	P	S/X	**	**	0/X	**	033-91052-0	HOLDDOWN NUT	1
E40	P	S/X	**	**	0/X	**	033-53921-0	RETAINING PIN	1
E41	P	S/X	**	**	0/X	**	033-53923-0	RETAING RING	1
E42	P	S/X	**	1	0/X	**	691-10131-0	O RING	2
				4	0/X	**	694-10131-0		
				5	0/X	**	695-10131-0		
E43	P	S/X	**	1	0/X	**	671-00147-0	O RING	1
				4	0/X	**	674-00147-0		
				5	0/X	**	675-00147-0		
E44	P	S/X	**	**	0/X	**	306-40088-0	HHCS 5/8-11 UNC X 4 1/4	4
E45	P	S/X	**	**	0/X	**	350-10136-0	WASHER	4
E46	P	S	**	**	0/X	A	033-91015-0	SAE-A RDR ADAPTER	1
	P	S	**	**	0/X	B/M	033-57967-0	SAE-B RDR ADAPTER	
	P	X	**	**	0/X	A	033-57958-0	SAE-A RDR ADAPTER	
	P	X	**	**	0/X	B/M	033-57957-0	SAE-B RDR ADAPTER	
E47	P	S/X	**	1	0/X	**	671-00033-0	O RING	1
				4	0/X	**	674-00033-0		
				5	0/X	**	675-00033-0		
E48	P	S/X	**	**	0/X	**	033-57966-0	REPLENISH ISOLATION TUBE	1
E49	P	S/X	**	**	0/X	**	225-92093-0	WAVE SPRING	1
E50	P	S/X	**	1	0/X	A	671-00152-0	O RING	1
	P	S/X	**	4	0/X	A	674-00152-0		
	P	S/X	**	5	0/X	A	675-00152-0		
	P	S/X	**	1	0/X	B	671-00155-0		
	P	S/X	**	4	0/X	B	674-00155-0		
	P	S/X	**	5	0/X	B	675-00155-0		
E51	P	S/X	**	**	0/X	A/B	033-57963-0	COUPLING	1

Continued on next page.

Parker Hannifin Corporation
Hydraulic Pump and Power Systems Division
United States

Section E P11/14 S/X Port Block									
Balloon #	Pump/ Motor	Type	Rotation	Seal Code	Internal Pump	Thru Drive	Item #	Description	Qty
E52	P	S/X	**	**	0/X	A	033-57965-0	SAE-A INSERT	1
	P	S/X	**	**	0/X	B	033-57964-0	SAE-B INSERT	
	P	S/X	**	**	0/X	M	S23-19371-0	BLANKING PLATE	
E53	P	S/X	**	**	0/X	A/B	356-65128-0	RETAINING RING	1
E54	P	S	**	1	0/X	**	691-10221-0	O RING	2
				4	0/X	**	694-10221-0		
				5	0/X	**	695-10221-0		
E55	P	S	**	**	0/X	**	306-40224-0	HHCS 1/2-13 UNC X 3 1/2	4
E56	P	S	**	1	0/X	**	080030100001	HOT OIL SHUTTLE EXT PILOT DRAIN	1
	P	S	**	5	0/X	**	080030100002		
E57	P	S	**	**	0/X	**	449-00019-0	SHIPPING PLUG	1
E58	P	S	**	**	0/X	**	449-00013-0	SHIPPING PLUG	1
E59	P	S/X	**	**	0/X	**	488-35003-0	PLUG	1
E60	P	S/X	**	1	0/X	**	691-00912-0	O RING	1
				4	0/X	**	694-00912-0		
				5	0/X	**	695-00912-0		
E61	P	S/X	**	**	0	**	449-00020-0	SHIPPING PLUG	1
					X	**	488-35019-0	PLUG	
E62	P	S/X	**	**	0/X	**	306-40242-0	HHCS 3/8-16UNC X 3-1/4	8
E63	P	S/X	**	**	0/X	**	306-40235-0	HHCS 3/8-16UNC X 5-1/2	4
E64	P	S/X	**	**	0/X	**	358-16360-0	SHCS 3/8-16 UNC X 4	4
E65	P	S/X	**	1	X	**	691-00920-0	O RING	1
				4	X	**	694-00920-0		
				5	X	**	695-00920-0		
E66	P	S/X	**	**	0	**	488-35002-0	PLUG	1
					X	**	449-00016-0	SHIPPING PLUG	
E67	P	S/X	**	1	0	**	691-00908-0	O RING	1
				4	0	**	694-00908-0		
				5	0	**	695-00908-0		
E68	P	S/X	**	**	0/X	**	S13-26133-0	ASSY SHIPPING COVER 1 1/2	2

Parker Hannifin Corporation
Hydraulic Pump and Power Systems Division
United States

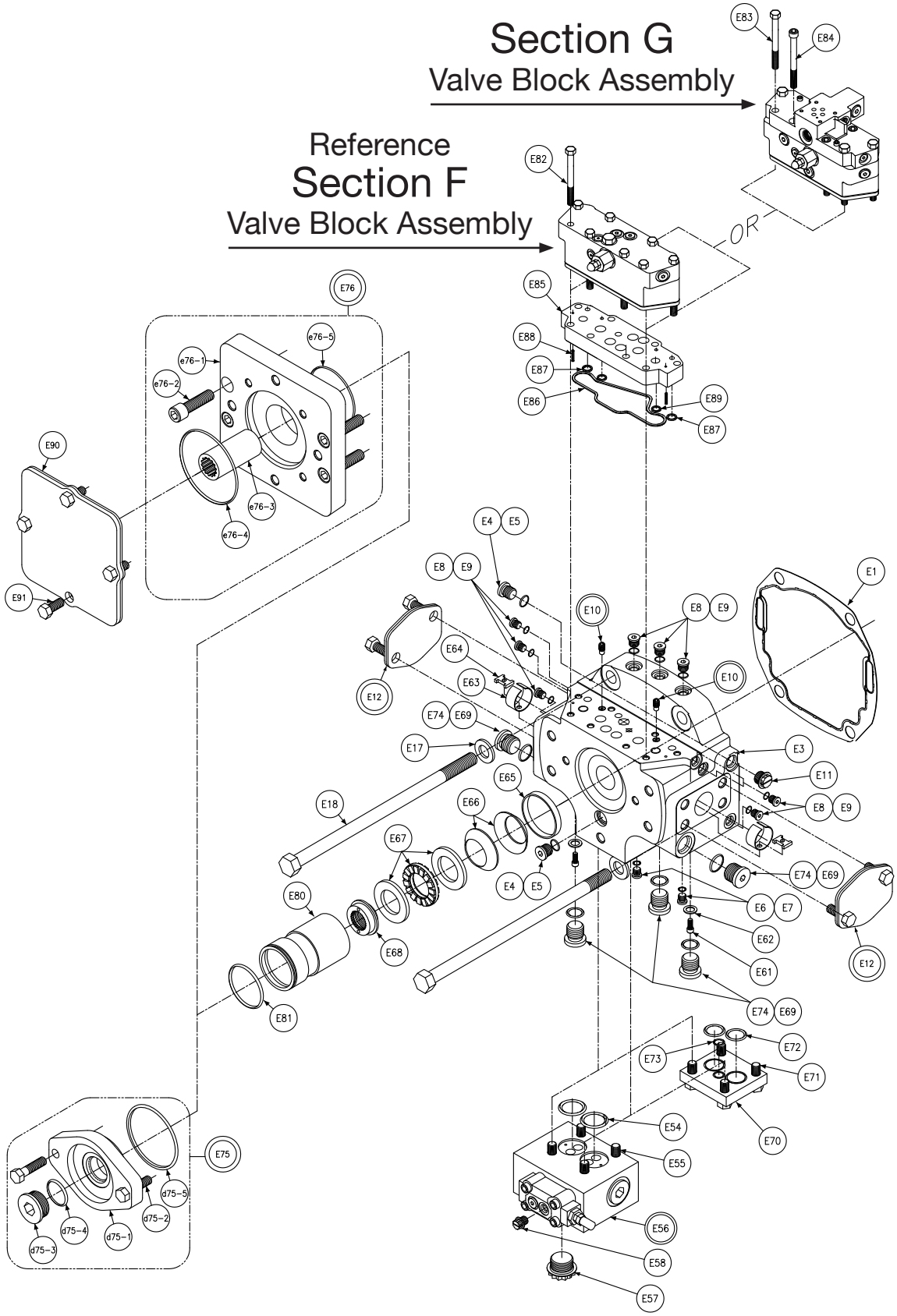
Section G
Valve Block Assembly
Reference
Section F
Valve Block Assembly
OR
E83
E84
E82
E85
E88
E87
E86
E89
E87
E76
e76–5
e76–1
e76–2
e76–3
e76–4
E90
E91
E4
E5
E8
E9
E1
E10
E8
E9
E64
E63
E10
E12
E74
E69
E17
E3
E11
E65
E18
E66
E8
E9
E67
E4
E5
E74
E69
E80
E6
E7
E62
E68
E61
E12
E81
E74
E69
E72
E73
E71
E70
E54
E55
E75
d75–5
d75–2
d75–4
d75–1
d75–3
E56
E58
E57

Section E P11/14 R & L Port Block						
Balloon #	**Motor Type**	**Seal Code**	**External Drive**	**Item #**	**Description**	**Qty**
E1	R/L	**	**	033-91079-0	GASKET PORT BLOCK	1
E3	R/L	**	**	033-92426-0	PORT BLOCK	1
E4	R/L	**	**	488-35018-0	PLUG	2
E5	R/L	1	**	691-00908-0	O RING	2
	R/L	4	**	674-00908-0		
	R/L	5	**	695-00908-0		
E6	R/L	**	**	488-35001-0	PLUG	2
E7	R/L	1	**	691-00904-0	O RING	2
	R/L	4	**	694-00904-0		
	R/L	5	**	695-00904-0		
E8	R/L	**	**	488-35041-0	PLUG	9
E9	R/L	1	**	691-00906-0	O RING	9
	R/L	4	**	674-00906-0		
	R/L	5	**	695-00906-0		
E10	R/L	**	**	S13-40266-0	CHECK VALVE	2
E11	R/L	**	**	449-00516-0	SHIPPING PLUG	1
E12	R/L	**	**	S13-26133-0	ASSY SHIPPING COVER 1 1/2	1
E17	R/L	**	**	350-10109-0	WASHER	4
E18	R/L	**	**	306-40172-0	SCREW HHC	4
E54	L	1	**	691-10221-0	O RING	2
		4	**	694-10221-0		
		5	**	695-10221-0		
E55	L	**	**	306-40224-0	SCREW HHC	4
E56	L	1	**	080030100001	SHUTTLE	1
		5	**	080030100002		
E57	L	**	**	449-00019-0	SHIPPING PLUG	1
E58	L	**	**	449-00013-0	SHIPPING PLUG	1
E61	R/L	**	**	359-11100-0	SCREW	2
E62	R/L	**	**	033-57450-0	LOCKWASHER	2
E63	R/L	**	**	033-95533-0	RING CHECK	2
E64	R/L	**	**	033-95534-0	CLAMP	2
E65	R/L	**	**	033-92688-0	LOCATING RACE	1
E66	R/L	**	**	033-92689-0	DISC SPRING	2
E67	R/L	**	**	230-82222-0	THRUST BEARING	1
E68	R/L	**	**	033-92690-0	HOLDDOWN NUT	1
E69	R/L	1	**	691-00912-0	O RING	5
		4		694-00912-0		
		5		695-00912-0		

Continued on next page.

Parker Hannifin Corporation
Hydraulic Pump and Power Systems Division
United States

Section E P11/14 R & L Port Block						
Balloon #	**Motor Type**	**Seal Code**	**External Drive**	**Item #**	**Description**	**Qty**
E70	R	**	**	033-57642-0	COVER SHUTTLE PAD	1
E71	R	**	**	306-40080-0	SCREW HHC	4
E72	R	1	**	691-00024-0	O RING	2
		4		N/A		
		5		695-00024-0		
E73	R	**	**	691-00015-0	O RING	1
	R	**	**	N/A		
	R	**	**	695-00015-0		
E74	R/L	**	**	488-35018-0	PLUG	5
E80	R/L	**	**	033-92691-0	SLEEVE REPL ISOLATION	1
E81	R/L	1	**	671-00147-0	O RING	1
		4		674-00147-0		
		5		675-00147-0		
E82	R/L	**	M/A/B/C/D	306-40242-0	HHCS 3/8-16UNC X 3-1/4	8
	R/L	**	E	306-40095-0	HHCS 3/8-16 UNC X 4 1/2	
E83	R/L	**	M/A/B/C/D	306-40132-0	HHCS 3/8-16 UNCX 4 1/4	4
	R/L	**	E	306-40235-0	HHCS 3/8-16UNC X 5-1/2	
E84	R/L	**	M/A/B/C/D	358-16360-0	SHCS 3/8-16 UNC X 4	4
	R/L	**	E	358-16400-0	SHCS 3/8-16 UNC X 5	
E85	R/L	**	E	033-92692-0	SPACER VALVE BLOCK	1
E86	R/L	1	E	671-00050-0	O RING	1
	R/L	4	E	674-00050-0		
	R/L	5	E	675-00050-0		
E87	R/L	1	E	671-00014-0	O RING	2
	R/L	4	E	674-00014-0		
	R/L	5	E	675-00014-0		
E88	R/L	**	E	325-08120-0	ROLL PIN	2
E89	R/L	1	E	671-00013-0	O RING	2
	R/L	4	E	674-00013-0		
	R/L	5	E	675-00013-0		
E90	R/L	**	A	034-59555-0	SHIPPING COVER SAE-A 2 BOLT	1
			B	034-59556-0	SHIPPING COVER SAE-B 2 BOLT	
			C	031-57252-0	SHIPPING COVER SAE-C 2-4 BOLT	
			D	031-57250-0	SHIPPING COVER SAE-D 4 BOLT	
			E	032-91405-0	SHIPPING COVER SAE-E 4 BOLT	

Continued on next page.

Section E P11/14 R & L Port Block						
Balloon #	**Motor Type**	**Seal Code**	**External Drive**	**Item #**	**Description**	**Qty**
E91	R/L	**	A	306-16120-0	HHCS 3/8-16UNC x 3/4	2
			B	306-20120-0	HHCS 1/2-13UNC x 3/4	2
			C	306-24160-0	HHCS 5/8-11 UNC x 1	4
			D	306-26160-0	HHCS 3/4-10 UNC x 1	2
			E	306-26160-0	HHCS 3/4-10 UNC x 1	2

M OPERATING COVER				
Balloon #	**Seal Code**	**Item #**	**Description**	**Qty**
E75	1	S21-04526-0	OPERATING COVER SAE-B 2-BOLT ASSY	1
	4	S21-04526-4		
	5	S21-04526-5		
e75-1	**	P2-075-1009-03	COVER	1
e75-2	**	306-40077-0	SCREW, HHC	2
e75-3	**	488-35019-0	PLUG	1
e75-4	1	691-00920-0	O RING	1
	4	694-00920-0		
	5	695-00920-0		
e75-5	1	671-00155-0	O RING	1
	4	674-00155-0		
	5	675-00155-0		

SAE-A ADAPTOR				
Balloon #	**Seal Code**	**Item #**	**Description**	**Qty**
E76	1	S23-16250-0	KIT REAR ADAPTOR SAE-A	1
	4	S23-16250-4		
	5	S23-16250-5		
e76-1	**	033-92684-0	SAE-A ADAPTOR	1
e76-2	**	358-20200-0	SHCS 1/2-13 UNC X 1 1/2	2
e76-3	**	033-92693-0	SAE-A COUPLING	1
e76-4	1	671-00152-0	O RING	1
	4	674-00152-0		
	5	675-00152-0		
e76-5	1	671-00155-0	O RING	1
	4	674-00155-0		
	5	675-00155-0		

SAE-B ADAPTOR				
Balloon #	**Seal Code**	**Item #**	**Description**	**Qty**
E76	1	S23-16251-0	KIT REAR ADAPTOR SAE-B	1
	4	S23-16251-4		
	5	S23-16251-5		
e76-1	**	033-92981-0	SAE-B ADAPTOR	1
e76-2	**	358-24220-0	SHCS 1/2-13 UNC X 1 1/2	4
e76-3	**	033-92982-0	SAE-B COUPLING	2
e76-4	1	671-00155-0	O RING	1
	4	674-00155-0		
	5	675-00155-0		
e76-5	1	671-00155-0	O RING	1
	4	674-00155-0		
	5	675-00155-0		

SAE-C ADAPTOR				
Balloon #	**Seal Code**	**Item #**	**Description**	**Qty**
E76	1	S23-16252-0	KIT REAR ADAPTOR SAE-C	1
	4	S23-16252-4		
	5	S23-16252-5		
e76-1	**	033-92555-0	SAE-C ADAPTOR	1
e76-2	**	358-24220-0	SHCS 1/2-13 UNC X 1 1/2	4
e76-3	**	033-92607-0	SAE-C COUPLING	1
e76-4	1	671-00159-0	O RING	1
	4	674-00159-0		
	5	675-00159-0		
e76-5	1	671-00155-0	O RING	1
	4	674-00155-0		
	5	675-00155-0		

SAE-D ADAPTOR				
Balloon #	**Seal Code**	**Item #**	**Description**	**Qty**
E76	1	S23-16253-0	KIT REAR ADAPTOR SAE-D	1
	4	S23-16253-4		
	5	S23-16253-5		
e76-1	**	033-92558-0	SAE-D ADAPTOR	1
e76-2	**	358-24260-0	SHCS 5/8-11 UNC x 2 1/4	4
e76-3	**	033-92482-0	SAE-D/E COUPLING	1
e76-4	1	671-00163-0	O RING	1
	4	674-00163-0		
	5	675-00163-0		
e76-5	1	671-00155-0	O RING	1
	4	674-00155-0		
	5	675-00155-0		

SAE-E ADAPTOR				
Balloon #	**Seal Code**	**Item #**	**Description**	**Qty**
E76	1	S23-16254-0	KIT REAR ADAPTOR SAE-E	1
	4	S23-16254-4		
	5	S23-16254-5		
e76-1	**	033-92467-0	SAE-E ADAPTOR	1
e76-2	**	358-24260-0	SHCS 5/8-11 UNC x 2 1/4	5
e76-3	**	033-92482-0	SAE-D/E COUPLING	2
e76-4	1	671-00165-0	O RING	1
	4	674-00165-0		
	5	675-00165-0		
e76-5	1	671-00155-0	O RING	1
	4	674-00155-0		
	5	675-00155-0		

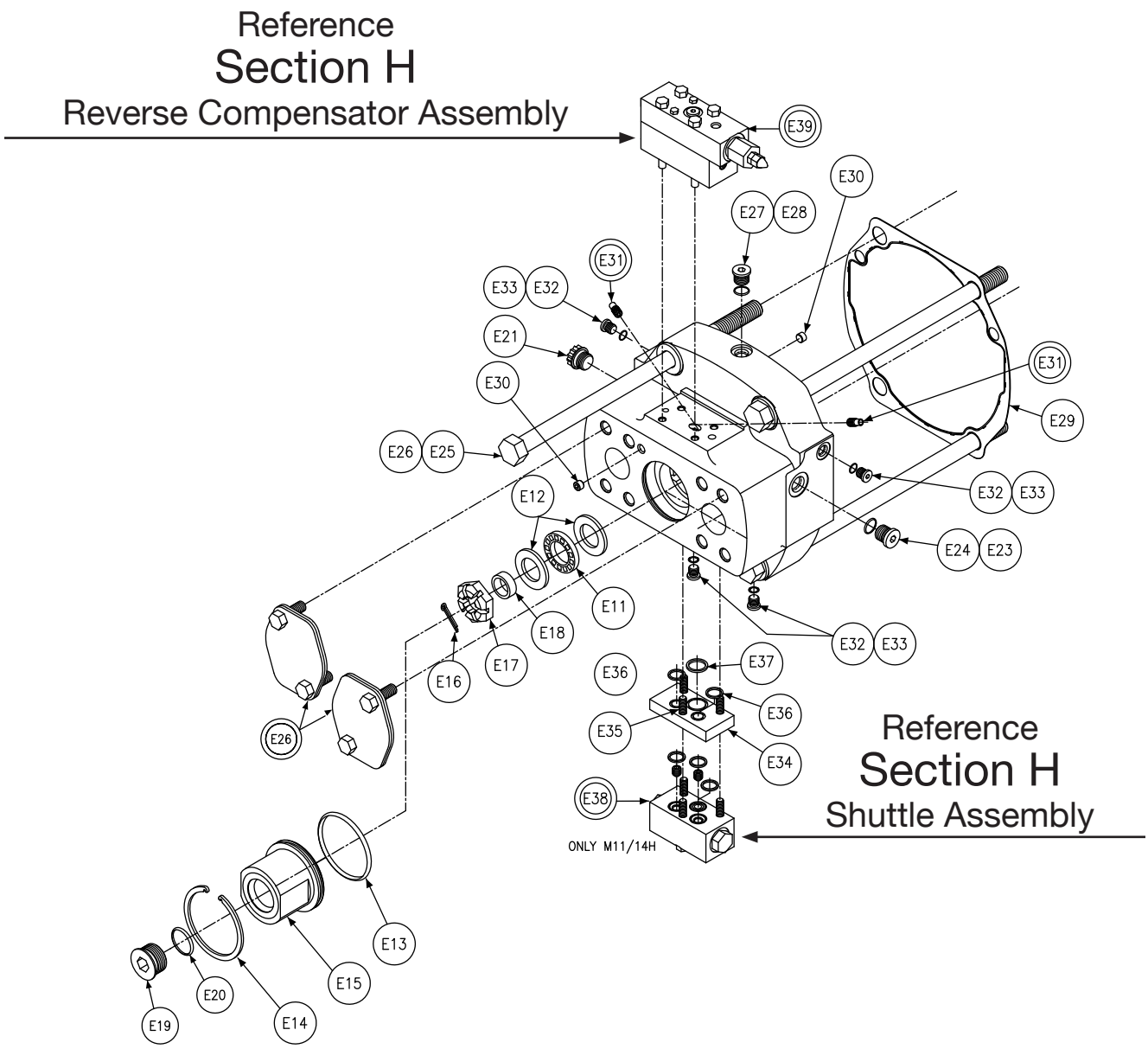

Parker Hannifin Corporation
Hydraulic Pump and Power Systems Division
United States

Section E M11/14 H & V Port Block						
Balloon #	**Motor Type**	**Secondary Control**	**Seal Code**	**Item #**	**Description**	**Qty**
E10	M11/14 H/V	0/6/7/8/ U/V/W/X/Y/Z	**	033-71521-0	PORT BLOCK	1
	M11/14 H/V	3/5	**	033-57783-0	REV COMP PORT BLK	
E11	M11/14 H/V	0/3/5/6/7/8/ U/V/W/X/Y/Z	**	230-82164-0	THRUST BEARING	1
E12	M11/14 H/V	0/3/5/6/7/8/ U/V/W/X/Y/Z	**	350-10081-0	THRUST WASHER	2
E13	M11/14 H/V	0/3/5/6/7/8/ U/V/W/X/Y/Z	1	671-00138-0	O-RING	1
			4	674-00138-0		
			5	675-00138-0		
E14	M11/14 H/V	0/3/5/6/7/8/ U/V/W/X/Y/Z	**	356-65095-0	SNAP RING	1
E15	M11/14 H/V	0/3/5/6/7/8/ U/V/W/X/Y/Z	**	033-70537-0	END COVER	1
E16	M11/14 H/V	0/3/5/6/7/8/ U/V/W/X/Y/Z	**	322-03324-0	COTTER PIN	1
E17	M11/14 H/V	0/3/5/6/7/8/ U/V/W/X/Y/Z	**	033-72026-0	NUT	1
E18	M11/14 H/V	0/3/5/6/7/8/ U/V/W/X/Y/Z	**	033-72101-0	RING SEAL	1
E19	M11/14 H/V	0/3/5/6/7/8/ U/V/W/X/Y/Z	**	488-35014-0	PLUG	1
E20	M11/14 H/V	0/3/5/6/7/8/ U/V/W/X/Y/Z	1	691-00912-0	O RING	1
			4	674-00912-0		
			5	695-00912-0		
E21	M11/14 H/V	0/3/5/6/7/8/ U/V/W/X/Y/Z	**	449-00016-0	SHIPPING PLUG	1
E22	M11/14 H/V	0/3/5/6/7/8/ U/V/W/X/Y/Z	**	S13-26133-0	ASSY SHIPPING COVER 1 1/2	1
E23	M11/14 H/V	0/3/5/6/7/8/ U/V/W/X/Y/Z	1	691-00908-0	O RING	1
			4	674-00908-0		
			5	695-00908-0		
E24	M11/14 H/V	0/3/5/6/7/8/ U/V/W/X/Y/Z	**	488-35018-0	PLUG	1
E25	M11/14 H/V	0/3/5/6/7/8/ U/V/W/X/Y/Z	**	306-40172-0	HHCS 3/4-10 UNC X 13	4
E26	M11/14 H/V	0/3/5/6/7/8/ U/V/W/X/Y/Z	**	350-10109-0	WASHER	4

Continued on next page.

Parker Hannifin Corporation
Hydraulic Pump and Power Systems Division
United States

Section E M11/14 H & V Port Block						
Balloon #	**Motor Type**	**Secondary Control**	**Seal Code**	**Item #**	**Description**	**Qty**
E27	M11/14 H/V	0/3/5/6/7/8/ U/V/W/X/Y/Z	**	488-35041-0	PLUG	1
E28	M11/14 H/V	0/3/5/6/7/8/ U/V/W/X/Y/Z	1	691-00906-0	O'RING	1
			4	674-00906-0		
			5	695-00906-0		
E29	M11/14 H/V	0/3/5/6/7/8/ U/V/W/X/Y/Z	**	033-91079-0	GASKET	1
E30	M11/14 H/V	3/5	**	431-90204-0	PLUG 1/8 PIPE	2
E31	M11/14 H/V	3/5	**	S13-40266-0	CHECK VALVE	2
E32	M11/14 H/V	0/3/5/6/7/8/ U/V/W/X/Y/Z	**	488-35001-0	PLUG	4
E33	M11/14 H/V	0/3/5/6/7/8/ U/V/W/X/Y/Z	1	691-00904-0	O RING	4
			4	674-00904-0		
			5	695-00904-0		
E34	M11/14V	0/3/5/6/7/8/ U/V/W/X/Y/Z	**	033-71649-0	COVER PLATE	1
E35	M11/14V	0/3/5/6/7/8/ U/V/W/X/Y/Z	**	306-40071-0	HHCS 5/16-18 UNC X 1	3
E36	M11/14V	0/3/5/6/7/8/ U/V/W/X/Y/Z	1	691-10014-0	GASKET	2
			4	674-00014-0		
			5	695-10014-0		
E37	M11/14V	0/3/5/6/7/8/ U/V/W/X/Y/Z	1	691-10019-0	GASKET	1
			4	674-00019-0		
			5	695-10019-0		
E38	M11/14H	0/3/5/6/7/8/ U/V/W/X/Y/Z	**	SEE SECTION H	SHUTTLE WITHOUT ORIFICES	1
	M11/14H	0/3/5/6/7/8/ U/V/W/X/Y/Z	**		SHUTTLE WITH ORIFICES	
E39	M11/14H/V	3/5	**	SEE SECTION H	COMPENSATOR REV PRESS	1

Parker Hannifin Corporation
Hydraulic Pump and Power Systems Division
United States

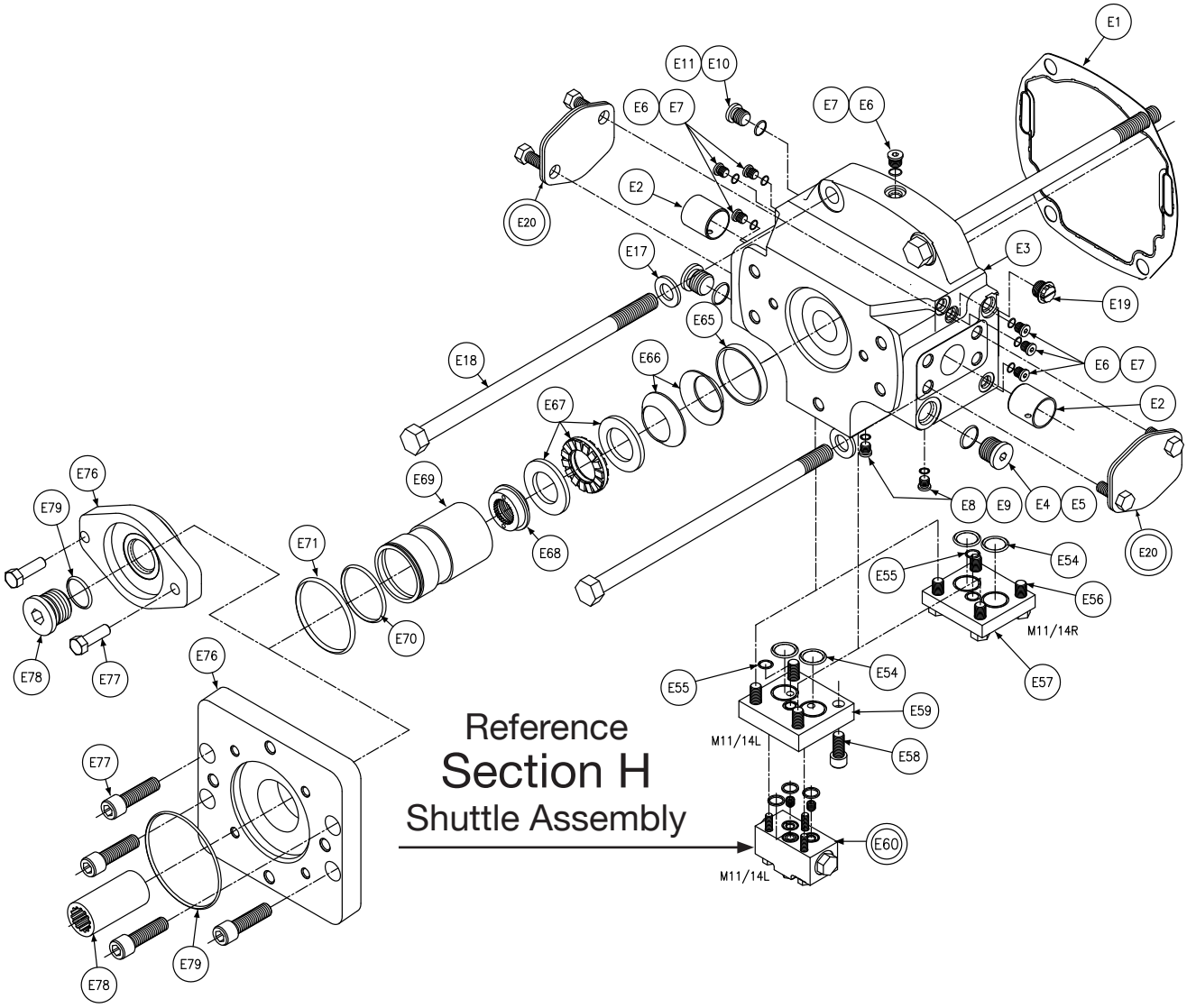

Parker Hannifin Corporation
Hydraulic Pump and Power Systems Division
United States

Section E M11/14 R & L Port Block						
Balloon #	Motor Type	External Drive	Seal Code	Item #	Description	Qty
E1	R/L	**	**	033-91079-0	GASKET PORT BLOCK	1
E2	R/L	**	**	033-57893-0	SLEEVE SOLID	2
E3	R/L	**	**	033-93644-0	PORT BLOCK	1
E4	R/L	**	**	488-35012-0	PLUG	2
E5	R/L	**	1	691-00912-0	O RING	2
			4	674-00912-0		
			5	695-00912-0		
E6	R/L	**	**	488-35041-0	PLUG	7
E7	R/L	**	1	691-00906-0	O RING	7
	R/L	**	4	674-00906-0		
	R/L	**	5	695-00906-0		
E8	R/L	**	**	488-35001-0	PLUG	2
E9	R/L	**	1	691-00904-0	O RING	2
	R/L	**	4	674-00904-0		
	R/L	**	5	695-00904-0		
E11	R/L	**	**	488-35018-0	PLUG	1
E12	R/L	**	1	691-00908-0	O RING	1
			4	674-00908-0		
			5	695-00908-0		
E17	R/L	**	**	350-10109-0	WASHER	4
E18	R/L	**	**	306-40172-0	HHCS 3/4-10 UNC X 13	4
E19	R/L	**	**	449-00016-0	SHIPPING PLUG	1
E20	R/L	**	**	S13-26133-0	ASSY SHIPPING COVER 1 1/2	2
E54	R/L	**	1	691-00024-0	O RING	2
	R/L	**	4	N/A		
	R/L	**	5	695-00024-0		
E55	R/L	**	1	691-00015-0	O RING	1
			4	N/A		
			5	695-00015-0		
E56	R	**	**	306-40080-0	HHCS 1/2-13 UNC X 1 1/4	3
E57	R	**	**	033-57642-0	COVER SHUTTLE PAD	1
E58	L	**	**	358-20160-0	SHCS 1/2-13 UNC X 1	3
E59	L	**	**	033-93734-0	ADAPTER SHUTTLE	1

Continued on next page.

Section E M11/14 R & L Port Block						
Balloon #	**Motor Type**	**External Drive**	**Seal Code**	**Item #**	**Description**	**Qty**
E60	L	**	**	SEE SECTION H	SHUTTLE VALVE	1
E65	R/L	**	**	033-92688-0	LOCATING RACE	1
E66	R/L	**	**	033-92689-0	DISC SPRING	2
E67	R/L	**	**	230-82222-0	THRUST BEARING	1
E68	R/L	**	**	033-92690-0	HOLDDOWN NUT	1
E69	R/L	**	**	033-92691-0	SLEEVE REPL ISOLATION	1
E70	R/L	**	1	671-00147-0	O RING	1
			4	674-00147-0		
			5	675-00147-0		
E71	R/L	**	1	671-00155-0	O RING	1
			4	674-00155-0		
			5	675-00155-0		
E72	R/L	A	**	034-59555-0	SHIPPING COVER SAE-A 2 BOLT	1
		B	**	034-59556-0	SHIPPING COVER SAE-B 2 BOLT	
		C	**	031-57252-0	SHIPPING COVER SAE-C 2-4 BOLT	
		D	**	031-57250-0	SHIPPING COVER SAE-D 4 BOLT	
		E	**	032-91405-0	SHIPPING COVER SAE-E 4-BOLT	
E73	R/L	A	**	306-16120-0	HHCS 3/8-16 UNC x 3/4	2
		B	**	306-20120-0	HHCS 1/2-13 UNC x 3/4	2
		C	**	306-24160-0	HHCS 5/8-11 UNC x 1	4
		D	**	306-26160-0	HHCS 3/4-10 UNC x 1	2
		E	**	306-26160-0	HHCS 3/4-10 UNC x 1	2

M OPERATING COVER				
Balloon #	**Seal Code**	**Item #**	**Description**	**Qty**
E75	1	S21-04526-0	OPERATING COVER SAE-B 2-BOLT ASSY	1
	4	S21-04526-4		
	5	S21-04526-5		
e75-1	**	P2-075-1009-03	COVER	1
e75-2	**	306-40077-0	HHCS 1/2-13 UNC X 1 3/4	2
e75-3	**	488-35019-0	PLUG	1
e75-4	1	691-00920-0	O RING	1
	4	694-00920-0		
	5	695-00920-0		
e75-5	1	671-00155-0	O RING	1
	4	674-00155-0		
	5	675-00155-0		

SAE-A ADAPTOR				
Balloon #	**Seal Code**	**Item #**	**Description**	**Qty**
E76	1	S23-16250-0	KIT REAR ADAPTOR SAE-A	1
	4	S23-16250-4		
	5	S23-16250-5		
e76-1	**	033-92684-0	SAE-A ADAPTOR	1
e76-2	**	358-20200-0	SHCS 1/2-13 UNC X 1 1/2	2
e76-3	**	033-92693-0	SAE-A COUPLING	2
e76-4	1	671-00152-0	O RING	1
	4	674-00152-0		
	5	675-00152-0		
e76-5	1	671-00155-0	O RING	1
	4	674-00155-0		
	5	675-00155-0		

SAE-B ADAPTOR				
Balloon #	**Seal Code**	**Item #**	**Description**	**Qty**
E76	1	S23-16251-0	KIT REAR ADAPTOR SAE-B	1
	4	S23-16251-4		
	5	S23-16251-5		
e76-1	**	033-92981-0	SAE-B ADAPTOR	1
e76-2	**	358-24220-0	SHCS 1/2-13 UNC X 1 1/2	2
e76-3	**	033-92982-0	SAE-B COUPLING	2
e76-4	1	671-00155-0	O RING	1
	4	674-00155-0		
	5	675-00155-0		
e76-5	1	671-00155-0	O RING	1
	4	674-00155-0		
	5	675-00155-0		

SAE-C ADAPTOR				
Balloon #	**Seal Code**	**Item #**	**Description**	**Qty**
E76	1	S23-16252-0	KIT REAR ADAPTOR SAE-C	1
	4	S23-16252-4		
	5	S23-16252-5		
e76-1	**	033-92555-0	SAE-C ADAPTOR	1
e76-2	**	358-24220-0	SHCS 1/2-13 UNC X 1 1/2	2
e76-3	**	033-92607-0	SAE-C COUPLING	2
e76-4	1	671-00159-0	O RING	1
	4	674-00159-0		
	5	675-00159-0		
e76-5	1	671-00155-0	O RING	1
	4	674-00155-0		
	5	675-00155-0		

SAE-D ADAPTOR				
Balloon #	**Seal Code**	**Item #**	**Description**	**Qty**
E76	1	S23-16253-0	KIT REAR ADAPTOR SAE-D	1
	4	S23-16253-4		
	5	S23-16253-5		
e76-1	**	033-92558-0	SAE-D ADAPTOR	1
e76-2	**	358-24260-0	SHCS 5/8-11 UNC x 2 1/4	4
e76-3	**	033-92482-0	SAE-D/E COUPLING	2
e76-4	1	671-00163-0	O RING	1
	4	674-00163-0		
	5	675-00163-0		
e76-5	1	671-00155-0	O RING	1
	4	674-00155-0		
	5	675-00155-0		

SAE-E ADAPTOR				
Balloon #	**Seal Code**	**Item #**	**Description**	**Qty**
E76	1	S23-16254-0	KIT REAR ADAPTOR SAE-E	1
	4	S23-16254-4		
	5	S23-16254-5		
e76-1	**	033-92467-0	SAE-E ADAPTOR	1
e76-2	**	358-24260-0	SHCS 5/8-11 UNC x 2 1/4	5
e76-3	**	033-92482-0	SAE-D/E COUPLING	2
e76-4	1	671-00165-0	O RING	1
	4	674-00165-0		
	5	675-00165-0		
e76-5	1	671-00155-0	O RING	1
	4	674-00155-0		
	5	675-00155-0		

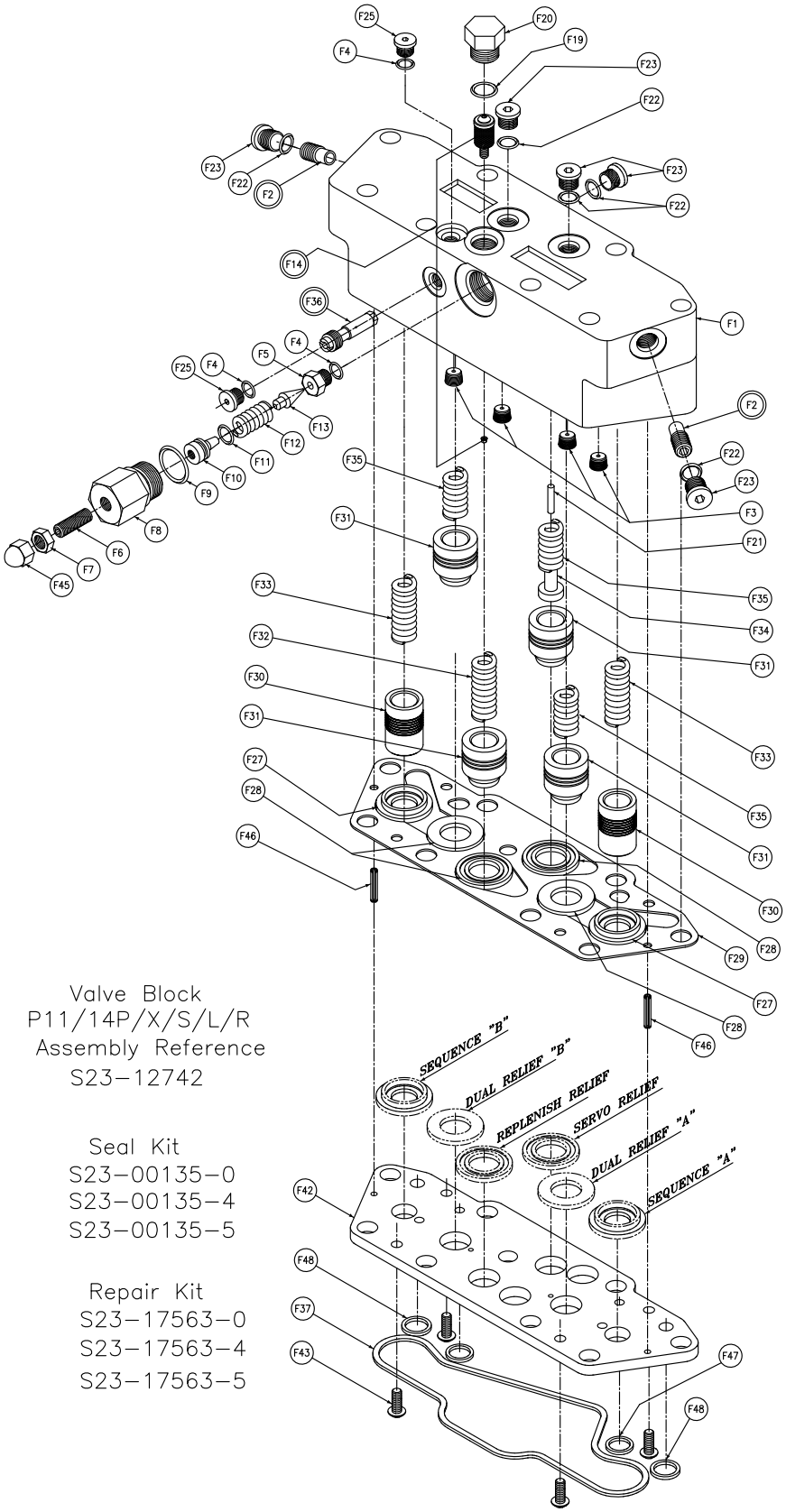

Valve Block
P11/14P/X/S/L/R
Assembly Reference
S23–12742

Seal Kit
S23–00135–0
S23–00135–4
S23–00135–5

Repair Kit
S23–17563–0
S23–17563–4
S23–17563–5

Section F P11/14 Valve Blocks Assembly					
Balloon #	**Pump Type**	**Seal Code**	**Item #**	**Description**	**Qty**
F1	P/X/S/L/R	**	033-91221-0	VALVE BLK	1
F2	P/X/S/L/R	**	S13-40266-0	VALVE CHECK	2
F3	P/X/S/L/R	**	033-91249-0	ORIFICE (.0465 DIA.) PLUG	4
F4	P/X/S/L/R	1	691-00903-0	O RING	3
		4	674-00903-0		
		5	695-00903-0		
F5	P/X/S/L/R	**	033-70508-0	SEAT	1
F6	P/X/S/L/R	**	312-13160-0	SCREW, SOC HD	1
F7	P/X/S/L/R	**	335-13100-0	NUT, HEX JAM	1
F8	P/X/S/L/R	**	033-70545-0	GUIDE-HOUSING	1
F9	P/X/S/L/R	1	691-00910-0	O RING	1
		4	674-00910-0		
		5	695-00910-0		
F10	P/X/S/L/R	**	036-21767-0	PISTON SEAL	1
F11	P/X/S/L/R	1	671-00012-0	O RING	2
		4	674-00012-0		
		5	675-00012-0		
F12	P/X/S/L/R	**	032-91798-0	SPRING	1
F13	P/X/S/L/R	**	036-12288-0	CONE	1
F14	P/X/S/L/R	**	S13-43240-0	SERVO STRAINER	1
F19	P/X/S/L/R	1	691-00906-0	O RING	1
		4	674-00906-0		
		5	695-00906-0		
F20	P/X/S/L/R	**	488-35003-0	PLUG	1
F21	P/X/S/L/R	**	230-82226-0	PIN 1/8 X 4/8	1
F22	P/X/S/L/R	1	691-00904-0	O RING	5
		4	674-00904-0		
		5	695-00904-0		
F23	P/X/S/L/R	**	488-35001-0	PLUG	5
F25	P/X/S/L/R	**	488-35049-0	PLUG	2
F27	P/X/S/L/R	**	033-70507-0	SEAT SEQ REL	2
F28	P/X/S/L/R	**	033-70500-0	REPL. + SERVO SEAT	4
F29	P/X/S/L/R	**	033-91193-0	GASKET	1
F30	P/X/S/L/R	**	033-72378-0	POPPET, SEQ.	2

Section F P11/14 Valve Blocks Assembly					
Balloon #	**Pump Type**	**Seal Code**	**Item #**	**Description**	**Qty**
F31	P/X/S/L/R	**	033-72379-0	POPPET, DUAL + REPL	4
F32	P/X/S/L/R	**	033-22141-0	SPRING, REPL	1
F33	P/X/S/L/R	**	033-70512-0	SPRING, SEQ./SERVO	2
F34	P/X/S/L/R	**	033-70482-0	SPRING RETAINER	1
F35	P/X/S/L/R	**	033-71086-0	SPRING, DUAL RELIEF	3
F36	P/X/S/L/R	**	S23-12814-0	VALVE, REPLEN PILOT	1
F37	P/X/S/L/R	1	671-00050-0	O RING	1
		4	674-00050-0		
		5	675-00050-0		
F42	P/X/S/L/R	**	033-91422-0	RETAINER PLATE	1
F43	P/X/S/L/R	**	353-25078-0	SCREW, BUTTON HD	4
F45	P/X/S/L/R	**	327-25006-0	NUT, ACORN	1
F46	P/X/S/L/R	**	325-08120-0	PIN, ROLL 1/8 X ¾ LG	2
F47	P/X/S/L/R	1	671-00013-0	O RING	2
		4	674-00013-0		
		5	675-00013-0		
F48	P/X/S/L/R	1	671-00014-0	O RING	2
		4	674-00014-0		
		5	675-00014-0		
F49	P/X/S/L/R	**	306-40169-0	SCREW HHC	8

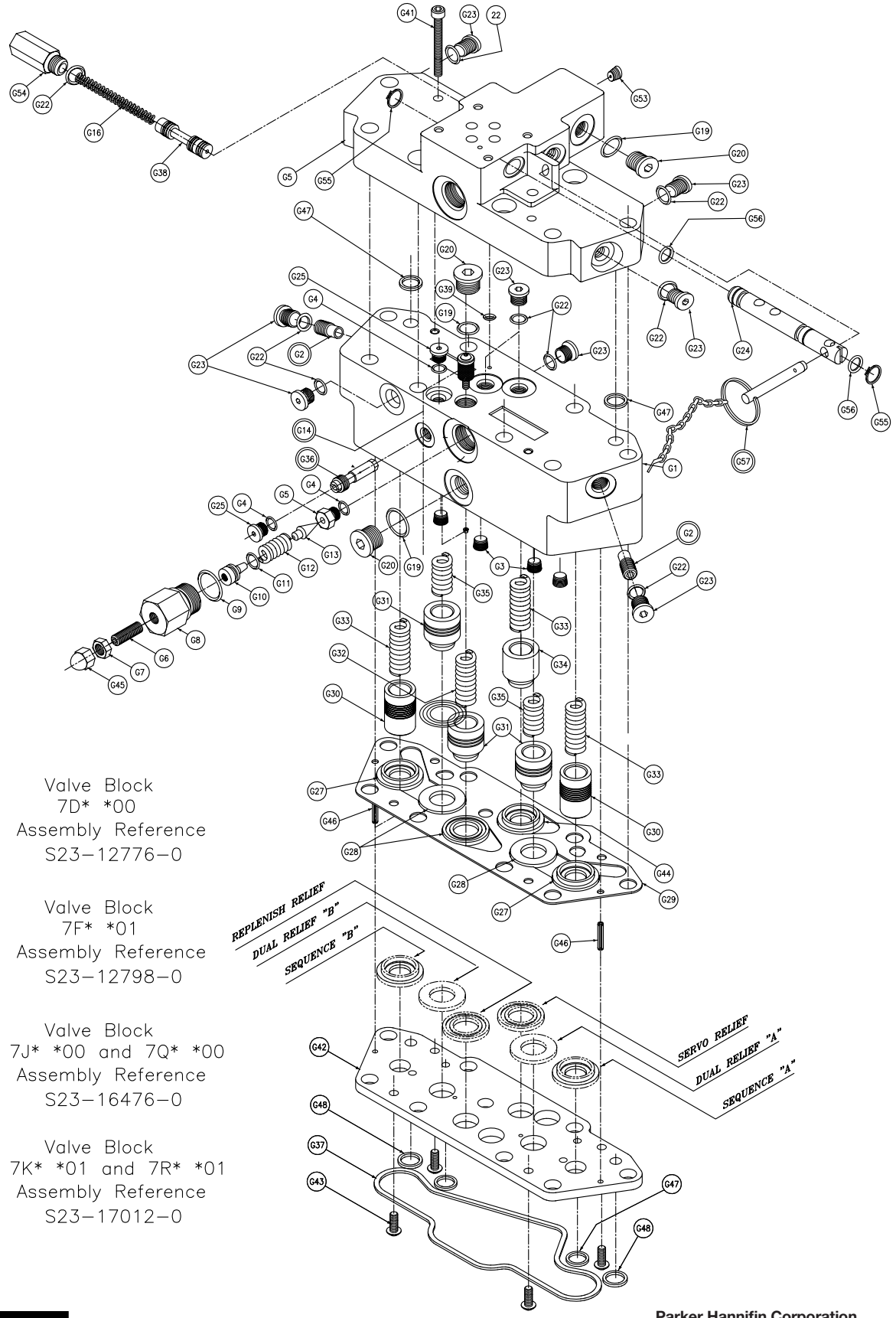
Valve Block
7D* *00
Assembly Reference
S23–12776–0
Valve Block
7F* *01
Assembly Reference
S23–12798–0
Valve Block
7J* *00 and 7Q* *00
Assembly Reference
S23–16476–0
Valve Block
7K* *01 and 7R* *01
Assembly Reference
S23–17012–0
REPLENISH RELIEF
DUAL RELIEF "B"
SEQUENCE "B"
SERVO RELIEF
DUAL RELIEF "A"
SEQUENCE "A"

Section G P11/14 Valve Blocks Assemblies for 700 Control					
Balloon #	**Primary 700 Control**	**Seal Code**	**Item #**	**Description**	**Qty**
G1	ALL	**	033-91335-0	VALVE BLK	1
G2	ALL	**	S13-40266-0	VALVE CHECK	2
G3	ALL	**	033-91249-0	ORIFICE (.0465 DIA.) PLUG	4
G4	ALL	1	691-00903-0	O RING	3
	ALL	4	674-00903-0		
	ALL	5	695-00903-0		
G5	ALL	**	033-70508-0	SEAT	1
G6	ALL	**	312-13160-0	SCREW, SOC HD	1
G7	ALL	**	335-13100-0	NUT, HEX JAM	1
G8	ALL	**	033-70545-0	GUIDE-HOUSING	1
G9	ALL	1	691-00910-0	O RING	1
	ALL	4	674-00910-0		
	ALL	5	695-00910-0		
G10	ALL	**	036-21767-0	PISTON SEAL	1
G11	ALL	1	671-00012-0	O RING	2
	ALL	4	674-00012-0		
	ALL	5	675-00012-0		
G12	ALL	**	032-91798-0	SPRING	1
G13	ALL	**	036-12288-0	CONE	1
G14	ALL	**	S13-43240-0	SERVO STRAINER	1
G15	7F* **01	**	033-54446-0	MANIFOLD FOR SHUTOFF	1
	7D* **00	**	033-54389-0	MANIFOLD LESS SHUTOFF	
	7K* **01, 7R* **01	**	033-93376-0	MANIFOLD FOR SHUTOFF	
	7J* **00, 7Q* **00	**	033-92887-0	MANIFOLD LESS SHUTOFF	
G16	ALL	**	225-92083-0	SPRING	1
G19	ALL	1	691-00906-0	O RING	3
	ALL	4	674-00906-0		
	ALL	5	695-00906-0		
G20	ALL	**	488-35041-0	PLUG	3
G22	ALL	1	691-00904-0	O RING	11
	ALL	4	674-00904-0		
	ALL	5	695-00904-0		
G23	ALL	**	488-35001-0	PLUG	10
G24	ALL	**	033-93866-0	SERVO SPOOL	1
G25	ALL	**	488-35049-0	PLUG	2
G27	ALL	**	033-70507-0	SEAT SEQ REL	2

Continued on next page.

Section G P11/14 Valve Blocks Assemblies for 700 Control					
Balloon #	**Primary 700 Control**	**Seal Code**	**Item #**	**Description**	**Qty**
G28	ALL	**	033-70500-0	REPL. + SERVO SEAT	3
G29	ALL	**	033-91193-0	GASKET	1
G30	ALL	**	033-72378-0	POPPET, SEQ.	2
G31	ALL	**	033-72379-0	POPPET, DUAL + REPL	3
G32	ALL	**	033-22141-0	SPRING, REPL	1
G33	ALL	**	033-70512-0	SPRING, SEQ./SERVO	3
G34	ALL	**	033-54398-0	POPPET SERVO	1
G35	ALL	**	033-71086-0	SPRING, DUAL RELIEF	2
G36	ALL	**	S23-12814-0	VALVE, REPLEN PILOT	1
G37	ALL	1	671-00050-0	O RING	1
	ALL	4	674-00050-0		
	ALL	5	675-00050-0		
G38	ALL	**	033-54392-0	SPOOL	1
G39	ALL	1	671-00008-0	O RING	2
	ALL	4	674-00008-0		
	ALL	5	675-00008-0		
G41	ALL	**	358-10180-0	SCREW SHC	2
G42	ALL	**	033-91422-0	RETAINER PLATE	1
G43	ALL	**	353-25078-0	SCREW, BUTTON HD	4
G44	ALL	**	033-54399-0	SERVO SEAT	1
G45	ALL	**	327-25006-0	NUT, ACORN	1
G46	ALL	**	325-08120-0	PIN, ROLL 1/8 X ¾ LG	2
G47	ALL	1	671-00013-0	O RING	2
	ALL	4	674-00013-0		
	ALL	5	675-00013-0		
G48	ALL	1	671-00014-0	O RING	2
	ALL	4	674-00014-0		
	ALL	5	675-00014-0		
G50	ALL	**	449-00013-0	PLUG SHIPPING	1
G53	ALL	**	033-25528-0	ORIFICE	1
G54	ALL	**	035-54400-0	PLUG	1
G55	7F* *01, 7K* *01, 7R* *01	**	356-31043-0	RING RETAINING	2
G56	7F* *01, 7K* *01, 7R* *01	1	671-00011-0	O RING	2
		4	674-00011-0		
		5	675-00011-0		
G57	7F* *01, 7K* *01, 7R* *01	**	S23-02208-0	PIN	1

Parker Hannifin Corporation
Hydraulic Pump and Power Systems Division
United States

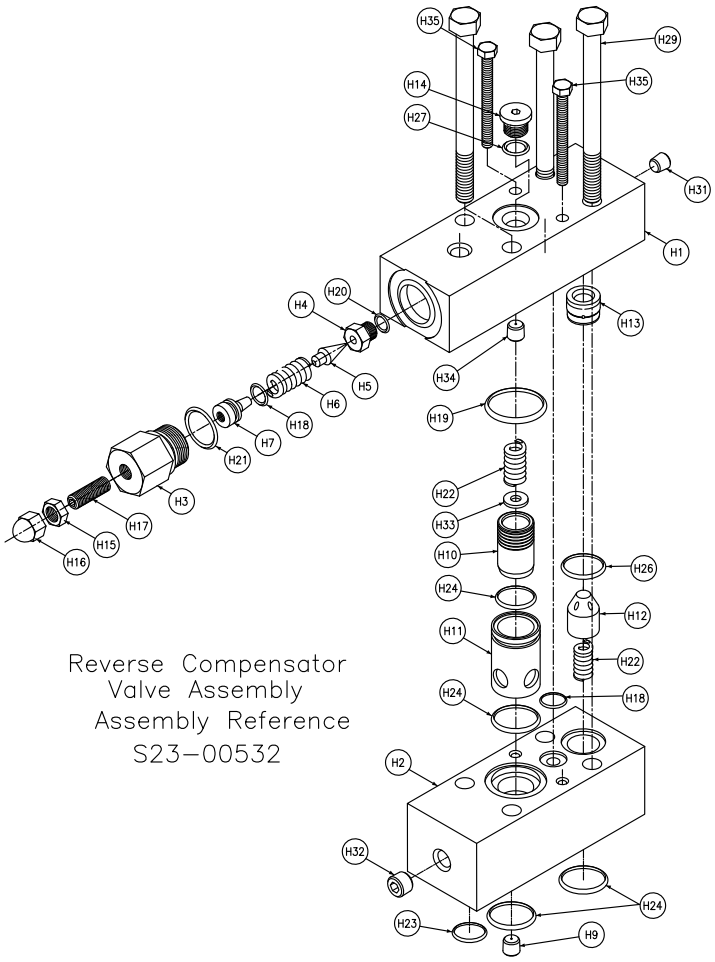

Reverse Compensator
Valve Assembly
Assembly Reference
S23–00532

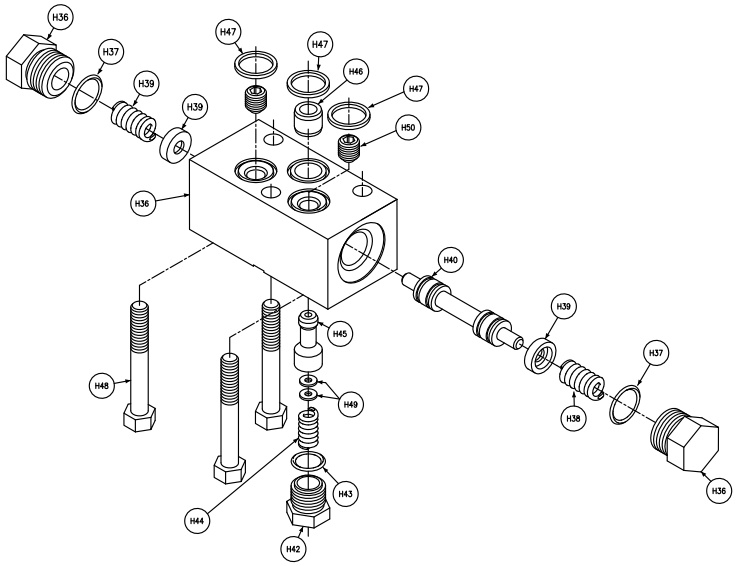

Shuttle Valve
Assembly Reference
S13–48776

Shuttle Valve Less H50
Assembly Reference
S13–48273

Section H M11/14 Shuttle & Reverse Compensator Assemblies					
Balloon #	**Motor Type**	**Seal Code**	**Item #**	**Description**	**Qty**
H1	H/V	**	033-53832-0	COVER	1
H2	H/V	**	033-53833-0	BODY REVERSE COMPENSATOR	1
H3	H/V	**	033-70545-0	GUIDE-HOUSING	1
H4	H/V	**	033-70508-0	SEAT	1
H5	H/V	**	036-12288-0	CONE	1
H6	H/V	**	032-91798-0	SPRING COMP	1
H7	H/V	**	036-21767-0	PISTON SEAL	1
H9	H/V	**	035-43275-0	ORIFICE #51(.067) 1/16 PT	1
H10	H/V	**	036-38466-0	PISTON	1
H11	H/V	**	036-38464-0	SLEEVE	1
H12	H/V	**	035-49407-0	POPPET	1
H13	H/V	**	035-49406-0	SEAT	1
H14	H/V	**	488-35001-0	PLUG	1
H15	H/V	**	335-13100-0	NUT, HEX JAM	1
H16	H/V	**	327-13005-0	NUT, ACORN	1
H17	H/V	**	312-13160-0	SCREW, SOCHD	1
H18	H/V	1	671-00012-0	O RING	2
	H/V	4	674-00012-0		
	H/V	5	675-00012-0		
H19	H/V	1	691-00022-0	O RING	1
	H/V	4	674-00022-0		
	H/V	5	675-00022-0		
H20	H/V	1	691-00903-0	O RING	1
	H/V	4	674-00903-0		
	H/V	5	695-00903-0		
H21	H/V	1	691-00910-0	O RING	1
	H/V	4	674-00910-0		
	H/V	5	695-00910-0		
H22	H/V	**	036-38449-0	SPRING	2
H23	H/V	1	691-10014-0	GASKET	1
	H/V	4	674-00014-0		
	H/V	5	695-10014-0		
H24	H/V	1	691-00018-0	O RING	4
	H/V	4	674-00018-0		
	H/V	5	695-00018-0		

Continued on next page.

Section H M11/14 Shuttle & Reverse Compensator Assemblies					
Balloon #	**Motor Type**	**Seal Code**	**Item #**	**Description**	**Qty**
H26	H/V	1	691-00017-0	O RING	1
	H/V	4	674-00017-0		
	H/V	5	675-00017-0		
H27	H/V	1	691-00904-0	O RING	1
	H/V	4	674-00904-0		
	H/V	5	695-00904-0		
H29	H/V	**	306-40197-0	SCREW, HHC	4
H31	H/V	**	431-90104-0	1/16 PIPE PLUG	1
H32	H/V	**	431-90204-0	1/8 PIPE PLUG	1
H33	H/V	**	345-10008-0	WASHER	1
H34	H/V	**	800599	ORFICE .033/036 1/16 PIPE	1
H35	H/V	**	306-40167-0	SCREW, HHC	2
H36	H/L	**	033-93510-0	PLUG	2
H37	H/L	**	691-00908-0	O RING	2
	H/L	**	674-00908-0		
	H/L	**	695-00908-0		
H38	H/L	**	033-70515-0	SPRING	2
H39	H/L	**	033-70495-0	WASHER	2
H40	H/L	**	033-70529-0	SPOOL	1
H41	H/L	**	033-53117-0	SHUTTLE VALVE BODY	1
H42	H/L	**	033-72129-0	PLUG	1
H43	H/L	**	691-00906-0	O RING	1
	H/L	**	674-00906-0		
	H/L	**	695-00906-0		
H44	H/L	**	033-71923-0	SPRING	1
H45	H/L	**	033-71925-0	SPOOL	1
H46	H/L	**	033-53154-0	SEAT	1
H47	H/L	1	691-10016-0	GASKET	3
	H/L	4	674-10016-0		
	H/L	5	695-20016-0		
H48	H/L	**	306-40106-0	SCREW, HHC	3
H49	H/L	**	345-20004-0	WASHER BRASS	2
H50	H/L	**	033-53523-0	ORFICE .078	2

The items described in this document and other documents and descriptions provided by Parker Hannifin Corporation, Hydraulics Group, and its authorized distributors ("Seller") are hereby offered for sale at prices to be established by Seller. This offer and its acceptance by any customer ("Buyer") shall be governed by all of the following Terms and Conditions. Buyer's order for any item described in its document, when communicated to Seller verbally, or in writing, shall constitute acceptance of this offer. All goods or work described will be referred to as "Products".

1. Terms and Conditions. Seller's willingness to offer Products, or accept an order for Products, to or from Buyer is expressly conditioned on Buyer's assent to these Terms and Conditions and to the terms and conditions found on-line at www.parker.com/saleterms/. Seller objects to any contrary or additional term or condition of Buyer's order or any other document issued by Buyer.
2. Price Adjustments; Payments. Prices stated on the reverse side or preceding pages of this document are valid for 30 days. After 30 days, Seller may change prices to reflect any increase in its costs resulting from state, federal or local legislation, price increases from its suppliers, or any change in the rate, charge, or classification of any carrier. The prices stated on the reverse or preceding pages of this document do not include any sales, use, or other taxes unless so stated specifically. Unless otherwise specified by Seller, all prices are F.O.B. Seller's facility, and payment is due 30 days from the date of invoice. After 30 days, Buyer shall pay interest on any unpaid invoices at the rate of 1.5% per month or the maximum allowable rate under applicable law.
3. Delivery Dates; Title and Risk; Shipment. All delivery dates are approximate and Seller shall not be responsible for any damages resulting from any delay. Regardless of the manner of shipment, title to any products and risk of loss or damage shall pass to Buyer upon tender to the carrier at Seller's facility (i.e., when it's on the truck, it's yours). Unless otherwise stated, Seller may exercise its judgment in choosing the carrier and means of delivery. No deferment of shipment at Buyers' request beyond the respective dates indicated will be made except on terms that will indemnify, defend and hold Seller harmless against all loss and additional expense. Buyer shall be responsible for any additional shipping charges incurred by Seller due to Buyer's changes in shipping, product specifications or in accordance with Section 13, herein.
4. Warranty. Seller warrants that the Products sold hereunder shall be free from defects in material or workmanship for a period of eighteen months from the date of delivery to Buyer. The prices charged for Seller's products are based upon the exclusive limited warranty stated above, and upon the following disclaimer: DISCLAIMER OF WARRANTY: THIS WARRANTY COMPRISES THE SOLE AND ENTIRE WARRANTY PERTAINING TO PRODUCTS PROVIDED HEREUNDER. SELLER DISCLAIMS ALL OTHER WARRANTIES, EXPRESS AND IMPLIED, INCLUDING MERCHANTABILITY AND FITNESS FOR A PARTICULAR PURPOSE.
5. Claims; Commencement of Actions. Buyer shall promptly inspect all Products upon delivery. No claims for shortages will be allowed unless reported to the Seller within 10 days of delivery. No other claims against Seller will be allowed unless asserted in writing within 60 days after delivery or, in the case of an alleged breach of warranty, within 30 days after the date within the warranty period on which the defect is or should have been discovered by Buyer. Any action based upon breach of this agreement or upon any other claim arising out of this sale (other than an action by Seller for any amount due to Seller from Buyer) must be commenced within thirteen months from the date of tender of delivery by Seller or, for a cause of action based upon an alleged breach of warranty, within thirteen months from the date within the warranty period on which the defect is or should have been discovered by Buyer.
6. LIMITATION OF LIABILITY. UPON NOTIFICATION, SELLER WILL, AT ITS OPTION, REPAIR OR REPLACE A DEFECTIVE PRODUCT, OR REFUND THE PURCHASE PRICE. IN NO EVENT SHALL SELLER BE LIABLE TO BUYER FOR ANY SPECIAL, INDIRECT, INCIDENTAL OR CONSEQUENTIAL DAMAGES ARISING OUT OF, OR AS THE RESULT OF, THE SALE, DELIVERY, NON-DELIVERY, SERVICING, USE OR LOSS OF USE OF THE PRODUCTS OR ANY PART THEREOF, OR FOR ANY CHARGES OR EXPENSES OF ANY NATURE INCURRED WITHOUT SELLER'S WRITTEN CONSENT, EVEN IF SELLER HAS BEEN NEGLIGENT, WHETHER IN CONTRACT, TORT OR OTHER LEGAL THEORY. IN NO EVENT SHALL SELLER'S LIABILITY UNDER ANY CLAIM MADE BY BUYER EXCEED THE PURCHASE PRICE OF THE PRODUCTS.
7. Contingencies. Seller shall not be liable for any default or delay in performance if caused by circumstances beyond the reasonable control of Seller.
8. User Responsibility. The user, through its own analysis and testing, is solely responsible for making the final selection of the system and Product and assuring that all performance, endurance, maintenance, safety and warning requirements of the application are met. The user must analyze all aspects of the application and follow applicable industry standards and Product information. If Seller provides Product or system options, the user is responsible for determining that such data and specifications are suitable and sufficient for all applications and reasonably foreseeable uses of the Products or systems.
9. Loss to Buyer's Property. Any designs, tools, patterns, materials, drawings, confidential information or equipment furnished by Buyer or any other items which become Buyer's property, may be considered obsolete and may be destroyed by Seller after two consecutive years have elapsed without Buyer placing an order for the items which are manufactured using such property. Seller shall not be responsible for any loss or damage to such property while it is in Seller's possession or control.
10. Special Tooling. A tooling charge may be imposed for any special tooling, including without limitation, dies, fixtures, molds and patterns, acquired to manufacture Products. Such special tooling shall be and remain Seller's property notwithstanding payment of any charges by Buyer. In no event will Buyer acquire any interest in apparatus belonging to Seller which is utilized in the manufacture of the Products, even if such apparatus has been specially converted or adapted for such manufacture and notwithstanding any charges paid by Buyer. Unless otherwise agreed, Seller shall have the right to alter, discard or otherwise dispose of any special tooling or other property in its sole discretion at any time.
11. Buyer's Obligation; Rights of Seller. To secure payment of all sums due or otherwise, Seller shall retain a security interest in the goods delivered and this agreement shall be deemed a Security Agreement under the Uniform Commercial Code. Buyer authorizes Seller as its attorney to execute and file on Buyer's behalf all documents Seller deems necessary to perfect its security interest. Seller shall have a security interest in, and lien upon, any property of Buyer in Seller's possession as security for the payment of any amounts owed to Seller by Buyer.
12. Improper Use and Indemnity. Buyer shall indemnify, defend, and hold Seller harmless from any claim, liability, damages, lawsuits, and costs (including attorney fees), whether for personal injury, property damage, patent, trademark or copyright infringement or any other claim, brought by or incurred by Buyer, Buyer's employees, or any other person, arising out of: (a) improper selection, improper application or other misuse of Products purchased by Buyer from Seller; (b) any act or omission, negligent or otherwise, of Buyer; (c) Seller's use of patterns, plans, drawings, or specifications furnished by Buyer to manufacture Product; or (d) Buyer's failure to comply with these terms and conditions. Seller shall not indemnify Buyer under any circumstance except as otherwise provided.
13. Cancellations and Changes. Orders shall not be subject to cancellation or change by Buyer for any reason, except with Seller's written consent and upon terms that will indemnify, defend and hold Seller harmless against all direct, incidental and consequential loss or damage. Seller may change product features, specifications, designs and availability with notice to Buyer.
14. Limitation on Assignment. Buyer may not assign its rights or obligations under this agreement without the prior written consent of Seller.
15. Entire Agreement. This agreement contains the entire agreement between the Buyer and Seller and constitutes the final, complete and exclusive expression of the terms of the agreement. All prior or contemporaneous written or oral agreements or negotiations with respect to the subject matter are herein merged.
16. Waiver and Severability. Failure to enforce any provision of this agreement will not waive that provision nor will any such failure prejudice Seller's right to enforce that provision in the future. Invalidation of any provision of this agreement by legislation or other rule of law shall not invalidate any other provision herein. The remaining provisions of this agreement will remain in full force and effect.
17. Termination. This agreement may be terminated by Seller for any reason and at any time by giving Buyer thirty (30) days written notice of termination. In addition, Seller may by written notice immediately terminate this agreement for the following: (a) Buyer commits a breach of any provision of this agreement (b) the appointment of a trustee, receiver or custodian for all or any part of Buyer's property (c) the filing of a petition for relief in bankruptcy of the other Party on its own behalf, or by a third party (d) an assignment for the benefit of creditors, or (e) the dissolution or liquidation of the Buyer.
18. Governing Law. This agreement and the sale and delivery of all Products hereunder shall be deemed to have taken place in and shall be governed and construed in accordance with the laws of the State of Ohio, as applicable to contracts executed and wholly performed therein and without regard to conflicts of laws principles. Buyer irrevocably agrees and consents to the exclusive jurisdiction and venue of the courts of Cuyahoga County, Ohio with respect to any dispute, controversy or claim arising out of or relating to this agreement. Disputes between the parties shall not be settled by arbitration unless, after a dispute has arisen, both parties expressly agree in writing to arbitrate the dispute.
19. Indemnity for Infringement of Intellectual Property Rights. Seller shall have no liability for infringement of any patents, trademarks, copyrights, trade dress, trade secrets or similar rights except as provided in this Section. Seller will defend and indemnify Buyer against allegations of infringement of U.S. patents, U.S. trademarks, copyrights, trade dress and trade secrets ("Intellectual Property Rights"). Seller will defend at its expense and will pay the cost of any settlement or damages awarded in an action brought against Buyer based on an allegation that a Product sold pursuant to this Agreement infringes the Intellectual Property Rights of a third party. Seller's obligation to defend and indemnify Buyer is contingent on Buyer notifying Seller within ten (10) days after Buyer becomes aware of such allegations of infringement, and Seller having sole control over the defense of any allegations or actions including all negotiations for settlement or compromise. If a Product is subject to a claim that it infringes the Intellectual Property Rights of a third party, Seller may, at its sole expense and option, procure for Buyer the right to continue using the Product, replace or modify the Product so as to make it noninfringing, or offer to accept return of the Product and return the purchase price less a reasonable allowance for depreciation. Notwithstanding the foregoing, Seller shall have no liability for claims of infringement based on information provided by Buyer, or directed to Products delivered hereunder for which the designs are specified in whole or part by Buyer, or infringements resulting from the modification, combination or use in a system of any Product sold hereunder. The foregoing provisions of this Section shall constitute Seller's sole and exclusive liability and Buyer's sole and exclusive remedy for infringement of Intellectual Property Rights.
20. Taxes. Unless otherwise indicated, all prices and charges are exclusive of excise, sales, use, property, occupational or like taxes which may be imposed by any taxing authority upon the manufacture, sale or delivery of Products.
21. Equal Opportunity Clause. For the performance of government contracts and where dollar value of the Products exceed $10,000, the equal employment opportunity clauses in Executive Order 11246, VEVRAA, and 41 C.F.R. §§ 60-1.4(a), 60-741.5(a), and 60-250.4, are hereby incorporated.

June 2023	Added Variable Displacement Motor content to P/M11-14 Variable Displacement Pump catalog HY28-2677-03/GC/US

WARNING

The products described in this catalog can expose you to chemicals, including Lead, which is known to the State of California to cause cancer and birth defects or other reproductive harm. For more information go to www.p65warnings.ca.gov.

Parker Hannifin Corporation
Hydraulic Pump and Power Systems Division
United States

Notes

Parker Hannifin Corporation
Hydraulic Pump and Power Systems Division
United States

Parker Hannifin Corporation
Hydraulic Pump and Power Systems Division
United States

© 2023 Parker Hannifin Corporation, all rights reserved

Bulletin HY28-2677-03/GC/US
Effective: 06-23

Parker Hannifin Corporation
Hydraulic Pump and Power Systems Division
14249 Industrial Pkwy
Marysville, OH 43040 USA
phone 937 644 4532
fax 937 642 3639
www.parker.com/hps